Ferroli

RESIDENTIAL | COMMERCIAL | INDUSTRIAL

Full Product Range

FULL PRODUCT CATALOGUE FERROLI

IMPORTANT

For installation of room sealed and forced flue boilers and water heaters, use Ferroli original flue gas kits and accessories. Whenever original flue gas accessories are not used, Ferroli will not be held liable in case of anomalies that could jeopardise the function and safety of the system.

This document includes international standard products and codes. Some products and accessories may differ or not be available in particular geographical areas. For product and code confirmation, commercial conditions, delivery time and eventual minimum lots etc, please refer to Ferroli's commercial representatives. Application of accessories to be checked on respective installation manuals.

CERTIFIED
QUALITY
SYSTEM

WALL HUNG BOILERS 5

Domestic boilers

Bluehelix Hitech RRT 6

Electric boilers

Tor 8

Commercial boilers

Force W 9

FLOOR STANDING BOILERS 17

Commercial boilers

TP3 Cond 18

Prextherm RSW 20

Atlas D 22

Atlas A 23

Industrial boilers

Industrial boilers 24

WATER HEATERS 27

Gas

Pegaso Eco 28

Kona 29

Electric

SEV 31

Bravo 32

Novo 32

Cubo 33

Mini 33

HEAT PUMP WATER HEATERS 35

Egea Tech LT 36

Egea Tech LT-S 38

KEY OF SYMBOLS

REMOTE

Remote control of boiler parameters via remote control

INDOORS

The equipment is only suitable for operation in **indoor locations**

PROTECTED

Suitable for operation **outdoors** with a minimum temperature of **-T1°C for the standard version** and, if fitted with the antifrost kit, even **-T2°C**

EXTERNAL

Suitable for operation **outdoors** with a minimum temperature of **-T1°C for the standard version** and, if fitted with the antifrost kit, even **-T2°C**

RANGE RATED

Appliance certified as **"range rated"** according to EN 15502

CASCADE

Electronics features built-in **master-slave cascade** operation, without additional controllers

CLIMATIC

Possible connection to an optional outdoor probe, thus enabling **system flow temperature compensation**

ETAs 94%

It reaches **one of the highest seasonal room heating efficiencies** in its category: η_s **94%**

EASY MAINTENANCE

This equipment is designed specifically to offer **particularly simple** installation and maintenance

LPG READY

LPG ready, with a simple configuration the boiler can run on natural gas or LPG without the use of any additional conversion kits

MULTY COMB. CONTROL

MC²: Multy **C**ombustion **C**ontrol, new combustion system with patented gas-adaptive technology

PUMP MODULATING

Equipment fitted with **low consumption high modulating efficiency circulator (Erp Ready - Class A)**

BLUE FOREVER

Ultra high performing "Blue Forever" electrical heating elements featuring a special surface treatment that almost entirely reduces limescale build-up

EXCHANGER INOX DUAL

Stainless steel high performance bivalent **primary exchanger**

EXCHANGER STAINLESS STEEL

Stainless steel high performance mono-thermal **primary exchanger**

MODE

Appliance can be combined with preheating systems for the domestic hot water

CLASS 5

Boiler equipped with devices to **facilitate handling** during shipping and installation

CLASS 6

Minimum polluting emissions **(class 6 according to EN 15502-1)** already in compliance with the requirements of the ErP directive of 26.09.2018 (NOx emissions < 56mg/kWh)

RANGE

Modulating ratio between **Pmax** and **Pmin**

DHW

Fast and convenient hot water supply reaching the maximum **certified 3-star comfort.**

STOP AND GO

You can **delay burner ignition** by starting it up only when domestic hot water is actually drawn

COLLECTIVE PRESSURISED

F.P.S: Flue gas **P**rotection **S**ystem. The check valve offers **easy connection to pressurised collective flue systems** (ex. in restructuring), in accordance with regulation UNI 7129

REG. 812/2013

Products for replacement with identical model only (restiction valid only in the UK)

H2 HYDROGEN PLUG-IN

Operating with **natural gas mixtures enriched with hydrogen** already provided for distribution in Europe (*)

(*) mixtures of Natural Gas/Hydrogen 80%/20%

THERMO BALANCE / THERMO BALANCE DUAL

Exclusive integrated Ferroli **"Thermobalance"™** combustion cell

WALL HUNG BOILERS

DOMESTIC AND LIGHT COMMERCIAL

CONDENSING
ELECTRIC
COMMERCIAL

BLUEHELIX HITECH RRT

WALL HUNG CONDENSING BOILERS WITH INSTANTANEOUS DOMESTIC HOT WATER PRODUCTION

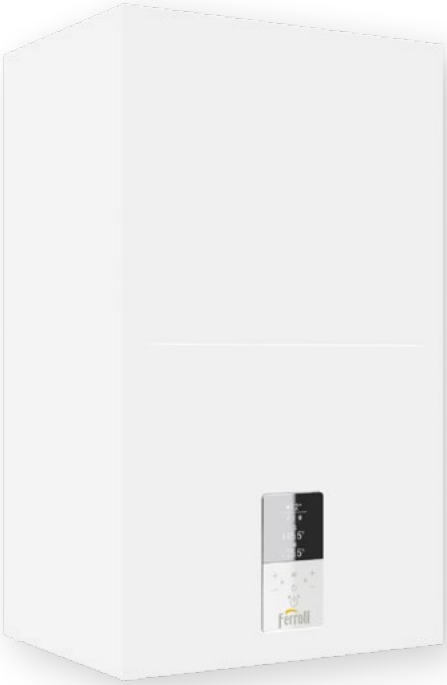

kiwa approved
UK WATER REGULATION 4

WARRANTY 7

> THE RANGE:

Models operating with both **natural gas** or **LPG.**

MOD. 24 C
- DHW flow rate (14 l/min at Δt 25°C)

MOD. 28 C
- DHW flow rate (16,1 l/min at Δt 25°C)

MOD. 34 C
- DHW flow rate (19 l/min at Δt 25°C)

7 year warranty as standard
- The Bluehelix HiTech RRT comes with a valuable 7 year manufacturer's parts and labour warranty, provided it is fitted with a high performance magnetic filter and is serviced annually.*

* Warranty terms and conditions can be downloaded at https://www.ferroli.com/media/1560174307.pdf

> PRODUCT BENEFITS:

- High thickness stainless steel primary heat exchanger with large passes to guarantee long life, reduced maintenance and high efficiency, even on existing heating systems
- **Class 6 NOx:** already in compliance with the requirements of the ErP regulation of 26.09.2018 (NOx emissions < 56mg/kWh)
- **M.G.R: M**ulti **G**as **R**eady. With a simple configuration the boiler can run on natural gas or LPG without using additional conversion kits
- Unique exchanger-**burner system with self-cooling door.** Less consumable parts simplifies maintenance and lowers costs
- **Instantaneous production** of domestic hot water with a dedicated DHW plate exchanger
- **Hydraulic fittings** covered by the boiler casing
- Large **multi-purpose backlit** graphic display allows for parameters to be set easily and correctly
- Boiler bypass only (would still need system bypass if required by building regulations)
- The boiler easily adapts to the load conditions thanks to the **broad modulating range** that can reach 1:10 (1:10 mod. 34 C, 1:9 mod. 28 C, 1:7 mod 24 C).
- **F.P.S: F**lue gas **P**rotection **S**ystem. The **flue gas check valve** offers easy connection to pressurised collective flue systems, in accordance with regulation UNI 7129
- Designed to **simplify routine servicing and maintinance procedures**
- **Solar system set-up** allows for the production of domestic hot water using solar panel systems
- **ECO function** in DHW mode for more savings when only short bursts of hot water are being used
- **Digital flame control** with three ignition attempts if operation gets blocked due to failed flame detection (only in natural gas mode)

> KEY FEATURES:

THERMO BALANCE — **Exclusive integrated Ferroli "Thermobalance"™ thermal unit**

H2 HYDROGEN PLUG-IN — Compatible with natural gas mixtures enriched with hydrogen* (not operational in the UK at time of going to print) *(* mixtures of Natural Gas/Hydrogen 80%/20% available in Europe)*

STOP AND GO — You can **delay burner ignition** by starting it up only when domestic hot water is actually drawn

RANGE 1 : 10 — Modulating ratio between **Pmax** and **Pmin**

COLLECTIVE PRESSURISED — **F.P.S: Flue gas P**rotection **S**ystem. The flue gas check valve can be **easily connected to approved pressurised collective flue systems** (e.g. in redevelopment projects)

MULTI COMB. CONTROL — **MC²: M**ulti **C**ombustion **C**ontrol, new combustion system with patented gas-adaptive technology

EXCHANGER STAINLESS STEEL — **Stainless steel** high performance mono-thermal **primary exchanger**

NATURAL GAS & LPG — **M.G.R: M**ulti **G**as **R**eady. With a simple configuration the boiler can run on natural gas or LPG without using additional conversion kit

MODE — The appliance can be combined with **preheating** systems for **domestic hot water**

CLIMATIC — Device operates with **climatic control** and sliding system temperature (optional external temperature probe)

EASY MAINTENANCE — Designed specifically to offer **particularly simple** installation and maintenance

ETAs 94% — It reaches one of the highest seasonal space heating efficiencies in its category: **η_s 94%**

EASY CONTROL — Optimum comfort with **'CapSense' touch screen technology** and large 2.8" graphic display

DHW — As a result of the special temperature maintenance of the heat exchanger, **DHW supply is even faster and more comfortable** with COMFORT operation

BLUEHELIX HITECH RRT		24 C	28 C	34 C
ERP Class	(Class G - A++)	A	A	A
	(Class G - A)	XL A	XL A	XXL A
Heating max / min heat input	kW	20.4 / 3.5	24.5 / 3.5	30.6 / 3.5
Heating max / min heat output (80/60°C)	kW	20.0 / 3.4	24.0 / 3.4	30.0 / 3.4
Heating max / min heat output (50/30°C)	kW	21.6 / 3.8	26.0 / 3.8	32.5 / 3.8
DHW max heat input (Hi)	kW	25.0	28.5	34.7
DHW min heat input (Hi)	kW	3.5	3.5	3.5
DHW max / min heat output	kW	24.5 / 3.4	28.0 / 3.4	34.0 / 3.4
Pmax / Pmin efficiency (80-60°C) (Hi)	%	98.1 / 98.0	98.1 / 98.0	97.9 / 98.0
Pmax / Pmin efficiency (50-30°C) (Hi)	%	106.1 / 107.5	106.1 / 107.5	106.1 / 107.5
Efficiency 30%	%	109.7	109.7	109.5
Max / min heating working pressure	bar	3 / 0.8	3 / 0.8	3 / 0.8
Max heating temperature	°C	95	95	95
DHW max / min working pressure	bar	9 / 0.3	9 / 0.3	9 / 0.3
DHW flow rate Δt 25°C / Δt 30°C	l/min	14 / 11.7	16.1 / 13.4	19.5 / 16.2
Empty weight	kg	28	28	32
No. of pieces/pallet	**nr.**	**10**	**10**	**10**
CODE	**NAT GAS/ LPG**	**0T4B2AWA**	**0T4B4AWA**	**0T4B7AWA**

BLUEHELIX HITECH RRT COMPONENTS DESCRIPTION

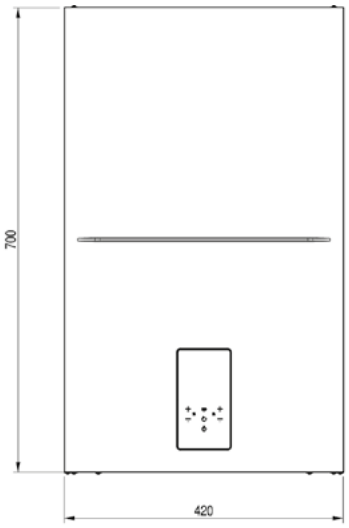

FRONT VIEW

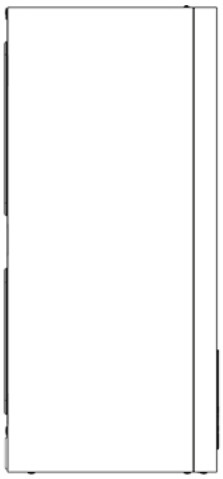

SIDE VIEW

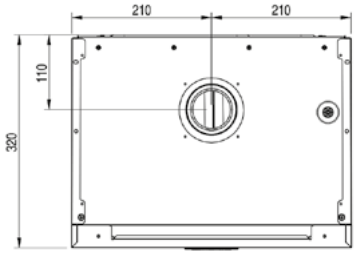

VIEW FROM ABOVE

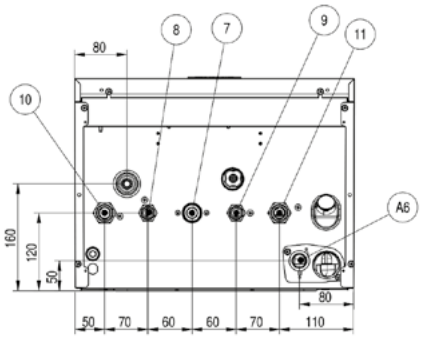

VIEW FROM BELOW

> KEY

7 3/4" gas inlet
8 1/2" DHW outlet
9 1/2" DHW inlet
10 3/4" system delivery
11 3/4" system return
12 3/4" flow to tank
13 3/4" return from tank
A6 condensate discharge connection

> ACCESSORIES:

DESCRIPTION	CODE
100mm standard horizontal flue kit	041025G0
100mm vertical flue kit	1KWUK356K
100mm 1m flue extension	1KWMA57W
100mm 90° flue bend	041051X0
100mm 45° flue bend	1KWMA64W
Slate for flat roof set	1KWMA81U
Slate for pitched roof set	1KWMA82U
100mm flue support bracket	1KWMR46A
100mm vertical flue adaptor	041002X0
Condensing concentric roof terminal Ø 60/100	1KWUK356

TOR WALL-HUNG ELECTRIC BOILER HEATING ONLY

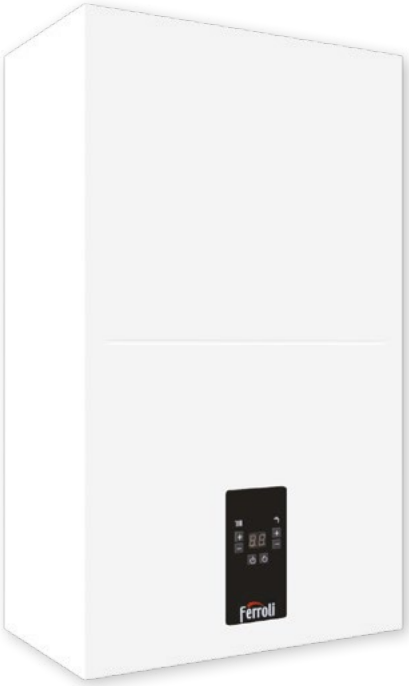

> PRODUCT BENEFITS:

- Power range: from 6 kW to 24 kW
- Pose keys to adjust and set the parameters
- Anti-freezing function
- Operating the water pump based on anti-sticking function
- Multiple security protection
- High-efficiency and energy-saving water pump
- High-strength wires and connectors, resistant to high temperature and high pressure
- Precise temperature setting and control

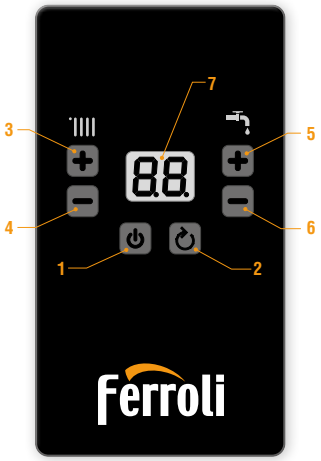

KEY 1 Power key **2** Reset key / back **3-4** Heating temperature plus and minus **5-6** Water tank temperature plus and minus key **7** Display

TOR		6	9	12	18	24
Erp Class*		D	D	D	D	D
Single phase power supply		220-240v~/50Hz	220-240v~/50Hz	-	-	-
Three phase power supply		400v 3N~/50Hz	400v 3N~/50Hz	400v 3N~/50Hz	400v 3N~/50Hz	400v 3N~/50Hz
Max current (single phase)	A	26.1	39.1	-	-	-
Max current for each single phase (three-phase)	A	8.7	13.1	17.4	26.1	34.8
Input power	kW	6	9	12	18	24
Heating water operating temperature, max	°C	80	80	80	80	80
Expansion vessel	lt	6	6	6	6	6
Boiler working pressure, min / max	bar	0.8 / 3.0	0.8 / 3.0	0.8 / 3.0	0.8 / 3.0	0.8 / 3.0
Boiler working pressure, recommended	bar	1.0 ÷ 1.7	1.0 ÷ 1.7	1.0 ÷ 1.7	1.0 ÷ 1.7	1.0 ÷ 1.7
Electrical protection class		IPX4D	IPX4D	IPX4D	IPX4D	IPX4D
Heating water joint		G 3/4"	G 3/4"	G 3/4"	G 3/4"	G 3/4"
Water replenishing joint		G 1/2"	G 1/2"	G 1/2"	G 1/2"	G 1/2"
Size: H × W × D	mm	700 × 420 × 250	700 × 420 × 250	700 × 420 × 250	700 × 420 × 250	700 × 420 × 250
Weight (when no water exists)	Kg	27	27	27	30	30

FORCE W

MODULAR POWER FOR NEW BUILDINGS AND HIGH-POWER UPGRADES

> THE RANGE:

The range consists of 5 boilers.

MOD. W 60
- Heat input 58.0 kW
- Effective heating output (50°C-30°C) 60.8 kW
- Class ErP A

MOD. W 80
- Heat input 74.4 kW
- Effective heating output (50°C-30°C) 77.0 kW
- Max P efficiency (50°C-30°C) 103.5

MOD. W 120
- Heat input 113.0 kW
- Effective heating output (50°C-30°C) 117 kW
- Max P efficiency (50°C-30°C) 103.5

MOD. W 99
- Heat input 96.6 kW
- Effective heating output (50°C-30°C) 100 kW
- Max P efficiency (50°C-30°C) 103.5

MOD. W 150
- Heat input 143 kW
- Effective heating output (50°C-30°C) 148 kW
- Max P efficiency (50°C-30°C) 103.5

> PRODUCT BENEFITS:

- **High power condensing thermal module**, designed for single installations or in banks **up to 600 kW**
- **Combi W60 boiler,** operating with both natural gas and LPG, is ideal for larger residential houses
- Hydraulic, gas and flue gas accessories **for bank installation**, with 2, 3 and 4 modules
- Heat exchanger with pre-assembled elements in **aluminum-silicon alloy** designed to achieve maximum exchange efficiency and low pressure drops on the water circuit
- Full pre-mixing **combustion unit** with metal fibre micro-flame burner with very low polluting emissions (**Class 6** according to EN 15502-1). The modules can run on **Natural Gas (NG)** and **LPG**
- **Boiler protection systems:**
  * Double sensor (delivery and return) system to operate at **constant ΔT**
  * Exchanger overtemperature protection sensor calibrated to 95°C
  * Flue gas safety sensor
  * Water pressure switch with minimum limit of 0.8 bar
- Hydraulic unit (provided as an accessory) with three-way shut-off valve for discharge into the atmosphere and option of choosing between two **circulators, standard and high head**
- Sealed room air/flue gas circuit and **check valve** on the flue gas ejection duct to size the pressurised manifold
- Module bank management with **self-configurating Master/Slave** system and option of setting the boiler on/off sequence
- **Range Rated** certified boiler to adjust the generated power to the system's needs by increasing the efficiency of the system and preserving the mechanics of the machine.
- The modules can be controlled and operated remotely:
  * Power or temperature adjustment with 0 - 10V signal
  * Blocking alarm signal for safety and to restart operation
  * **Opentherm (OT) and Modbus** communication protocols with settable parameters

> KEY FEATURES:

Device suitable for operation in a **partially protected place** with a minimum temperature of -5°C, as standard

Appliance certified as **"range rated"** according to UNI EN 483

Cascade operation

Device operates with **climatic control** and sliding system temperature (optional external temperature probe)

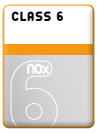

Minimum polluting emissions **(class 6 according to EN 15502-1)** as required by Directive ErP of 26.09.2018 (NOx emissions < 56mg/kWh)

MODEL			W 60	W 80	W 99	W 120	W 150
ERP Class	(Class D - A+++)		A	-	-	-	-
Heating heat input	Max/Min	kW	58.0 / 15.0	74.4 / 15.0	96.6 / 19.0	113.0 / 19.0	143.0 / 24.0
Heating heat output 80°C-60°C	Max/Min	kW	57 / 14.7	72.9 / 14.7	94.7 / 18.7	110.5 / 18.7	140.0 / 23.6
Useful heating output 50°C-30°C	Max/Min	kW	60.8 / 16.3	77.0 / 16.3	100.0 / 20.5	117.0 / 20.5	148.0 / 25.9
Efficiency	80°C-60°C 50°C-30°C 30% partial load	Pmax %/Pmin % Pmax %/Pmin % Pmax %	98.3 / 98.3 104.8 / 108.5 108.6	98.0 / 98.3 103.5 / 108.5 108.6	98.0 / 98.3 103.5 / 108.0 108.1	97.8 / 98.3 103.5 / 108.0 108.1	97.8 / 98.3 103.5 / 108.0 108.1
NOx emissions class			6	6	6	6	6
NOx (O_2=0%) weighted		mg/kWh	50	54	39	38	40
CO (O_2=0%) weighted		mg/kWh	75	85	49	50	50
Heating operating pressure	Max/Min	bar	6 / 0.8	6 / 0.8	6 / 0.8	6 / 0.8	6 / 0.8
Water volume		lt	4.2	4.2	5.6	5.6	6.7
Empty weight		kg	67	67	76	76	86
No. of pieces/pallet		**Nr.**	**6**	**6**	**6**	**6**	**6**
Thermal module FORCE W			**0MDSAAWA**	**0MDSCAWA**	**0MDSDAWA**	**0MDSEAWA**	**0MDSFAWA**
System hydraulic kit			042072X0	042072X0	042072X0	042072X0	042072X0
High performance modulating pump (8 mt)			042070X0	042070X0	042070X0	042070X0	042070X0
High performance modulating pump (10 mt)			042071X0	042071X0	042071X0	042071X0	042071X0

* FORCE W is provided without a circulator and hydraulic kit with the shut-off valves.

FORCE W COMPONENTS DESCRIPTION

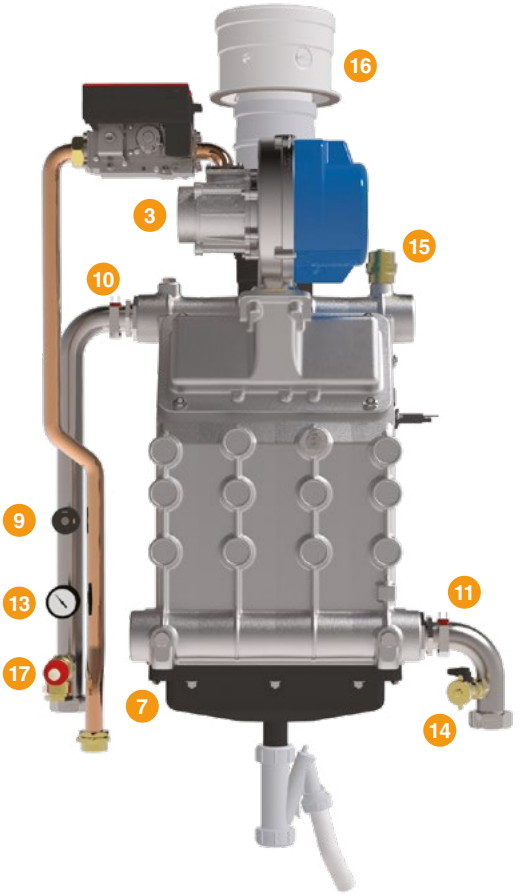

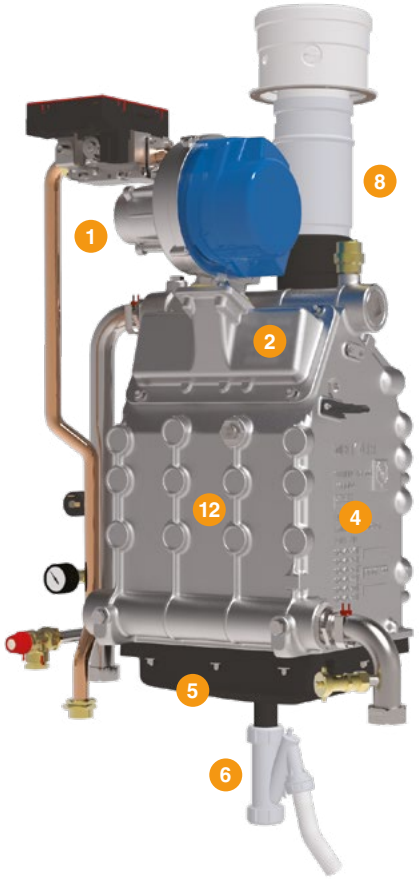

1. Pre-mixing unit
2. Burner
3. Silencer
4. Aluminium heat exchanger
5. Condensate collection manifold
6. Condensate discharge
7. Flue gas safety sensor 110°C
8. Swing check valve
9. Water pressure switch min 0.8 bar
10. System delivery temperature sensor
11. System return temperature sensor
12. Heat exchanger over-temperature safety sensor
13. Pressure gauge
14. Boiler drain cock
15. Air bleed valve
16. Combustion analysis outlet
17. Safety valve 6 bar

For correct installation, the boiler must always be purchased complete with the following kits: **Modulating circulator** and **System hydraulic kit**

> HYDRAULIC AND CONTROL ACCESSORIES - STARTING FLUE ACCESSORIES:

	DESCRIPTION		CODICE
	low-consumption modulating circulator Head 7 m		042070X0
	low-consumption modulating circulator Head 10 m		042071X0
	system hydraulic kit: 1 x MF 1"1/2 cock, 1 x 3-way T 1" 1/2 cock, 1 x 1" 1/2 check valve, 1 x MM		042072X0
	kit for management with thermostat (not supplied) of a dhw storage tank (for heating only boilers)		013017X0
	additional sensor for storage tank and/or system flow for cascade	cable 2 mt	1KWMA11W
		cable 5 mt	043005X0
	outdoor probe		013018X0
	ø 100 flue gas terminal		1KWMA29K

	DESCRIPTION	CODE
	90° coaxial bend, 360° swivel with 45° pitch ø 100/150 mm	041107X0
	1 mt concentric extension Ø 100/150 mm	041108X0
	0,5 mt concentric extension Ø 100/150 mm	041109X0
	1 mt concentric horizontal terminal pipe, Ø 100/150 mm Included wall gasket Ø 150 mm	041110X0
	1 mt concentric vertical terminal pipe, Ø 100/150 mm	041111X0
	wall gasket Ø 150 mm	041112X0
	90° bend kit in pps ø 100 mm	041077X0
	1 m PPS ø 100 mm MF flue gas duct kit	041073X0

FORCE W

DIMENSIONS AND CONNECTIONS
CHARACTERISTIC CIRCULATOR HEAD/FLOW RATE CURVES

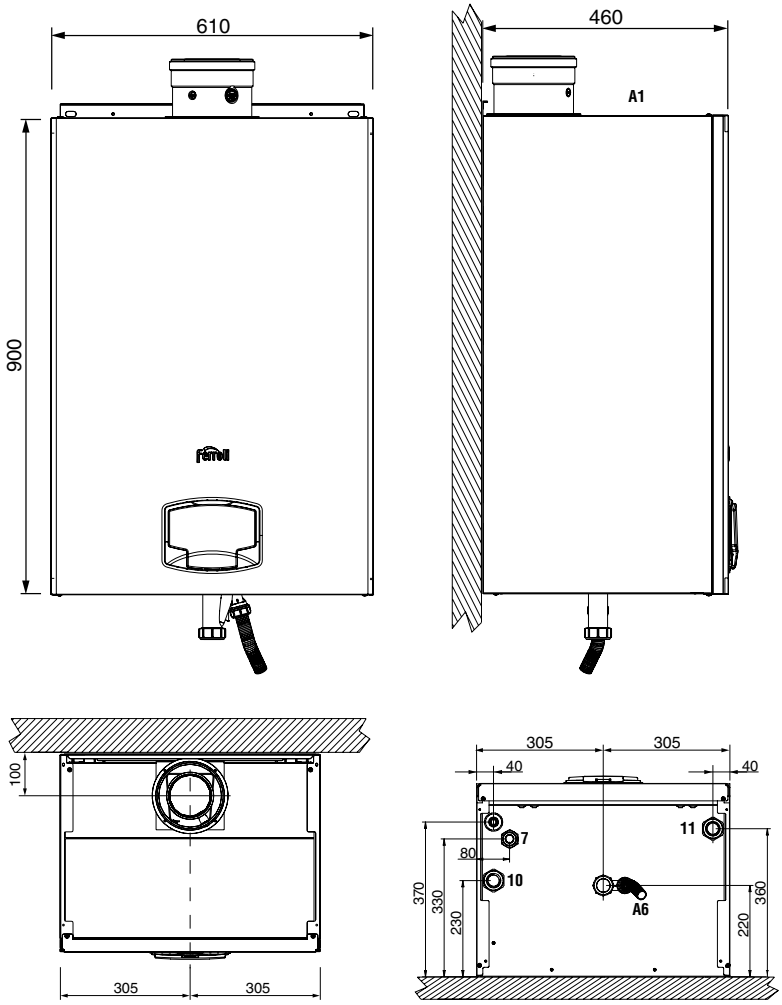

> KEY

7 Ø 3/4" gas inlet
10 Ø 1" ½ System delivery
11 Ø 1" ½ System return
A6 Condensate discharge
A1 Flue gas outlet Ø 100/150 mm

CIRCULATOR KIT 7 m

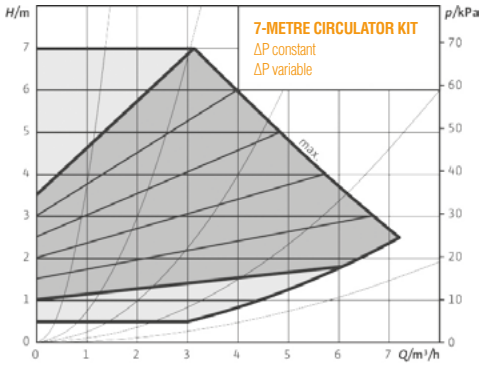

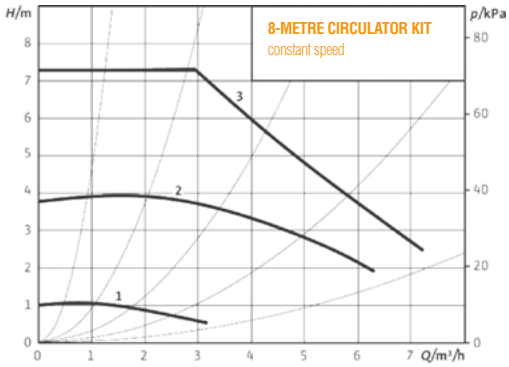

CIRCULATOR KIT 10 m

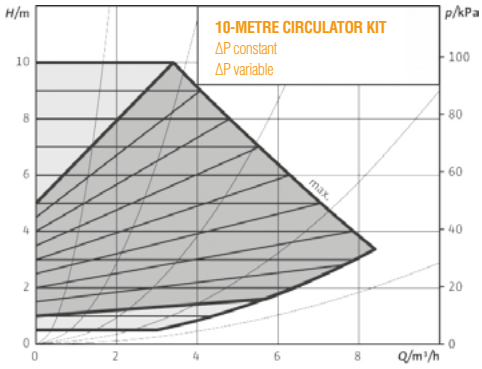

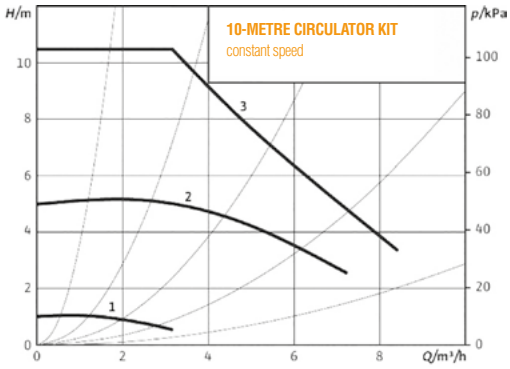

FORCE W CASCADE INSTALLATION

> ACCESSORIES:
NECESSARY TO CORRECTLY INSTALL FORCE W BOILERS IN A BANK

P_{out} (50/30°C)	MODULES FORCE W 60	80	99	120	150	Tot. modules	6 Self-standing frame (start) * 042076X0	7 Self-standing frame (extension) 042077X0	1 8-m modulating circulator 042070X0	1 10-m modulating circulator 042071X0	2 hydraulic kit: 1 x MF 1"1/2 cock, 1 x 3-way T 1" 1/2 cock, 1 x 1" 1/2 check valve, 1 x MM 042072X0	3 hydraulic (DN65 delivery and return), gas (DN40) manifolds kit for bank installation 042074X0	4 Blind flange kit DN65 042073X0	8 Flue gas manifold starter kit (Ø 200 mm) * 041091X0	9 Flue gas manifold extension kit (Ø 200 mm) * 041092X0
62	1					1	1	-	1	1	1	1	1	-	-
77		1				1	1	-	1	1	1	1	1	-	-
98			1			1	1	-	1	1	1	1	1	-	-
117				1		1	1	-	1	1	1	1	1	-	-
148					1	1	1	-	1	1	1	1	1	-	-
124	2					2	1	1	2	2	2	2	1	1	2
139	1	1				2	1	1	2	2	2	2	1	1	2
154		2				2	1	1	2	2	2	2	1	1	2
179	1			1		2	1	1	2	2	2	2	1	1	2
194		1		1		2	1	1	2	2	2	2	1	1	2
215			1	1		2	1	1	2	2	2	2	1	1	2
234				2		2	1	1	2	2	2	2	1	1	2
265				1	1	2	1	1	2	2	2	2	1	1	2
296					2	2	1	1	2	2	2	2	1	1	2
332			1	2		3	1	2	3	3	3	3	1	1	3
351				3		3	1	2	3	3	3	3	1	1	3
373		1			2	3	1	2	3	3	3	3	1	1	3
394			1		2	3	1	2	3	3	3	3	1	1	3
413				1	2	3	1	2	3	3	3	3	1	1	3
444					3	3	1	2	3	3	3	3	1	1	3
468				4		4	1	3	4	4	4	4	1	1	4
530				2	2	4	1	3	4	4	4	4	1	1	4
561				1	3	4	1	3	4	4	4	4	1	1	4
592					4	4	1	3	4	4	4	4	1	1	4

* * Flue gas accessories certified for installation in a utility room or in a protected place

> ACCESSORIES:
UPON REQUEST FOR CONFIGURATION ACCORDING TO PROJECT SPECIFICATIONS

	DESCRIPTION		CODE
	additional sensor for storage tank and/or system flow for cascade	cable 2 m	1KWMA11W
		cable 5 m	043005X0
	outdoor probe		013018X0
	hydraulic separator DN 32 For installation until 150 kW. The installer is responsible for the connection with the boiler		042086X0
	hydraulic separator DN 65 For installation from 151 kW to 300 kW		042078X0
	installation kit for hydraulic separator. For installation from 151 kW to 300 kW		042079X0
	hydraulic separator DN 65 For installation from 301 kW to 600 kW		042080X0
	installation kit for hydraulic separator. For installation from 301 kW to 600 kW		042081X0
	gasketed plates heat exchanger. The hydraulic connection between the boiler and the exchanger is the responsibility of the installer.		

FORCE W DIMENSIONS AND CONNECTIONS CASCADE INSTALLATION

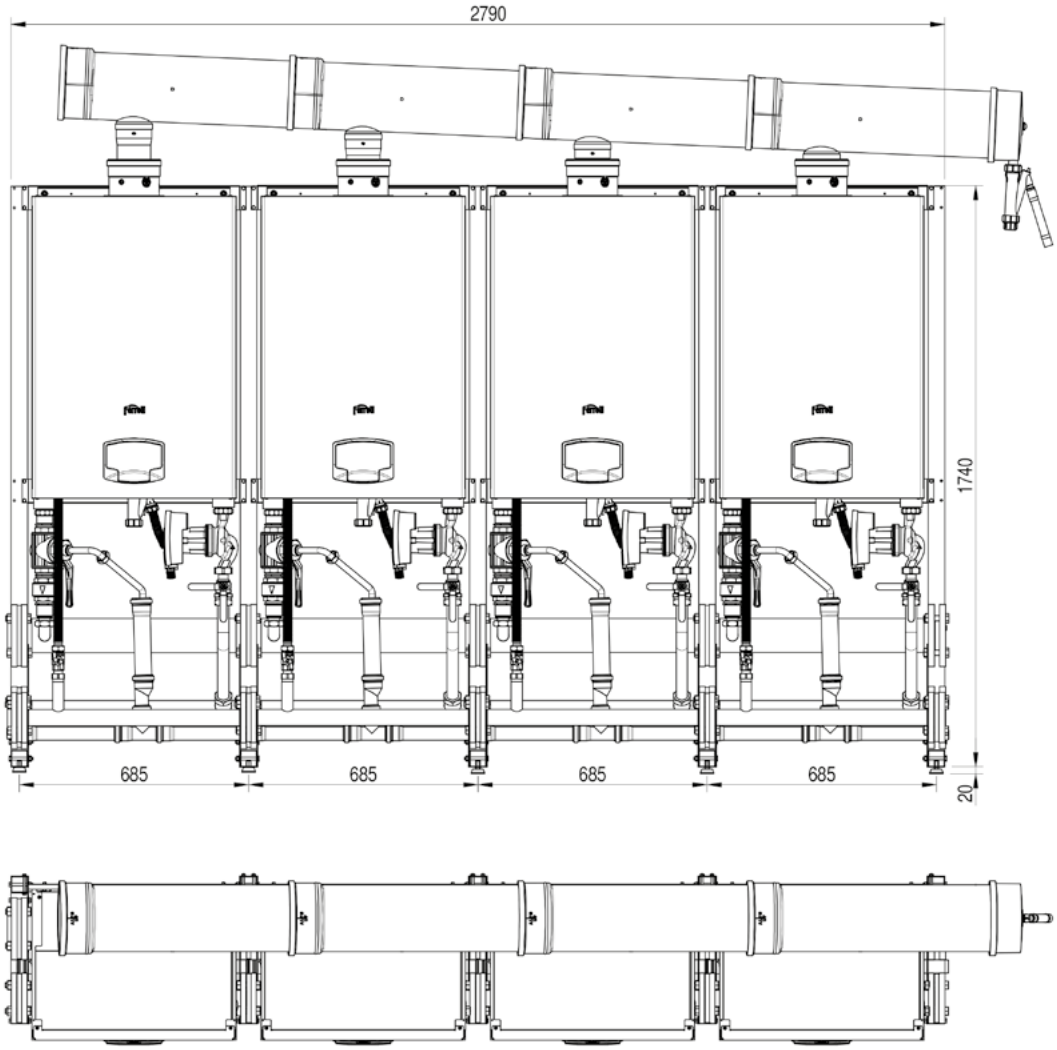

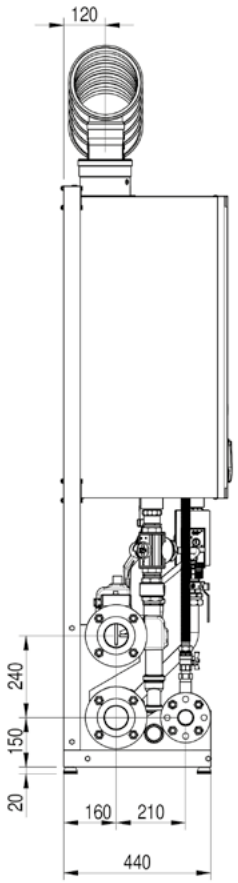

> CASCADE KIT FITTINGS:

- Delivery/return manifolds DN65 PN16
- Gas manifold DN40 PN16
- Condensation drain manifold Ø 40 mm
- Flue gas manifold Ø 200 mm

FORCE W OUTDOOR INSTALLATION KIT

- Cabinet equipped for installing of the FORCE W boilers outdoors in a single or bank configuration up to 600 kW
- The cabinet can be combined with one of five models from the FORCE W range and one of the two circulators (8 m and 10 m head)
- Standard equipment includes:
  * Support frame for the FORCE W boiler
  * DN 65 system delivery and return manifolds
  * DN 40 gas manifold
  * Flanged system fittings kit
  * Condensate collection and drain manifold
  * Three-way shut-off valve with discharge into the atmosphere
  * Two-way shut-off valve
  * Check valve
  * Gas connection pipe between boilers and manifold with shut-off valve
- All optional kits are available for single or bank installation up to four modules in line.
- The boiler combined with the cabinet kit can be installed without any protection against bad weather (IPX5D) and down to temperatures of -5°C

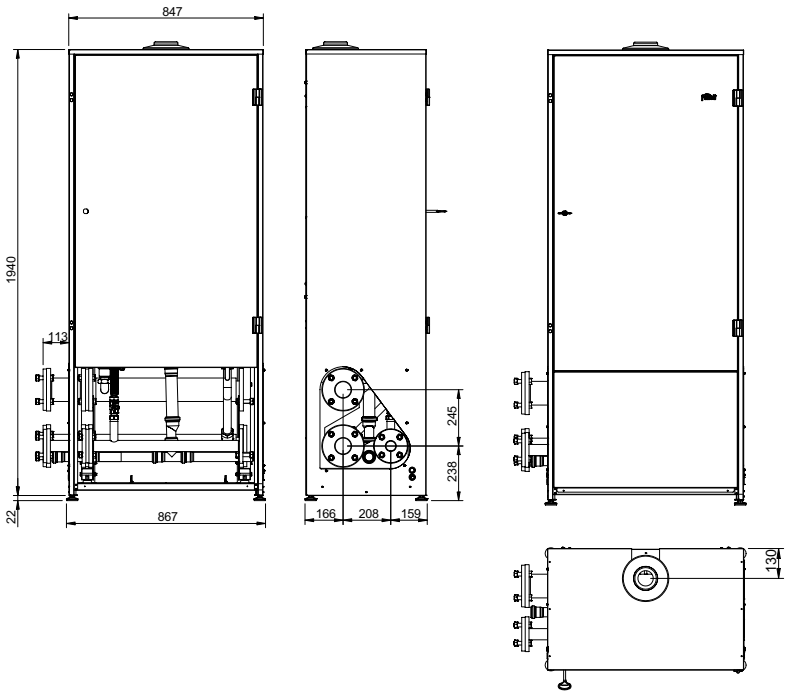

MODEL			W60		W80		W99		W120		W150	
ERP class			A		-		-		-		-	
Nominal power input	Max/Min	kW	58.0 / 15.0		74.4 / 15.0		96.6 / 19.0		113.0 / 19.0		143.0 / 24.0	
Nominal power output 80°C-60°C	Max/Min	kW	57 / 14.7		72.9 / 14.7		94.7 / 18.7		110.5 / 18.7		140.0 / 23.6	
Nominal power output 50°C-30°C	Max/Min	kW	60.8 / 16.3		77.0 / 16.3		100.0 / 20.5		117.0 / 20.5		148.0 / 25.9	
Thermal module FORCE W			0MDSAAWA		0MDSCAWA		0MDSDAWA		0MDSEAWA		0MDSFAWA	
Technical external cabinet			046058X0		046058X0		046058X0		046058X0		046058X0	
High performance modulating pump (8 mt)			042070X0	-	042070X0	-	042070X0	-	042070X0	-	042070X0	-
High performance modulating pump (10 mt)			-	042071X0	-	042071X0	-	042071X0	-	042071X0	-	042071X0

FORCE W CASCADE INSTALLATION FOR OUTDOORS

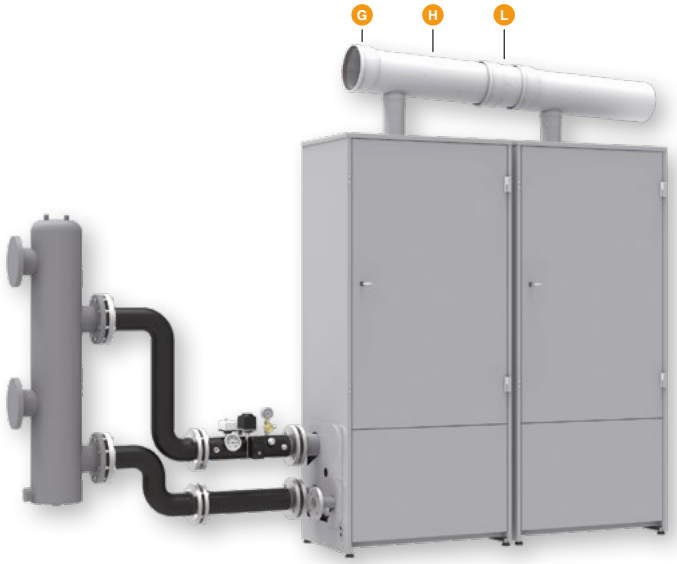

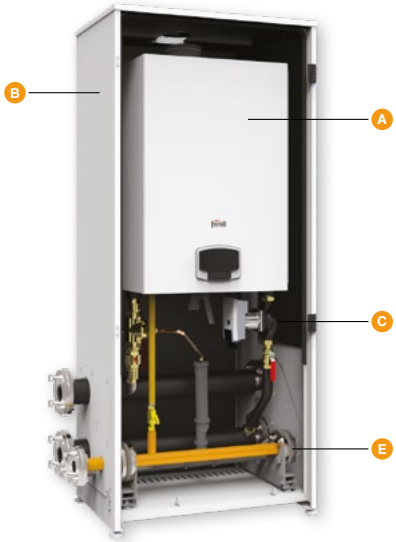

> ACCESSORIES:
NECESSARY TO CORRECTLY INSTALL FORCE W BOILERS IN A BANK

	A						B	C		E	G	H	L	
							Technical cabinet equipped for outdoors	8-m modulating circulator	10-m modulating circulator	Blind flange kit DN65	Flue gas manifold starter kit (Ø 200 mm) *	Flue gas manifold extension kit (Ø 200 mm) *	Flue manifold adapter F 200 mm	Smoke chimney F 100 mm (for unprotected roof installations)
P_{out} (50/30°C)	MODULES FORCE W					Tot. modules								
	60	80	99	120	150		046058X0	042070X0	042071X0	042073X0	041091X0	041092X0	041093X0	041094X0
62	1					1	1	1	1	1	-	-	-	1
77		1				1	1	1	1	1	-	-	-	1
98			1			1	1	1	1	1	-	-	-	1
117				1		1	1	1	1	1	-	-	-	1
148					1	1	1	1	1	1	-	-	-	1
124	2					2	2	2	2	1	1	2	1	2
139	1	1				2	2	2	2	1	1	2	1	2
154		2				2	2	2	2	1	1	2	1	2
179	1			1		2	2	2	2	1	1	2	1	2
194		1		1		2	2	2	2	1	1	2	1	2
215			1	1		2	2	2	2	1	1	2	1	2
234				2		2	2	2	2	1	1	2	1	2
265				1	1	2	2	2	2	1	1	2	1	2
296					2	2	2	2	2	1	1	2	1	2
332			1	2		3	3	3	3	1	1	3	2	3
351				3		3	3	3	3	1	1	3	2	3
373		1			2	3	3	3	3	1	1	3	2	3
394			1		2	3	3	3	3	1	1	3	2	3
413				1	2	3	3	3	3	1	1	3	2	3
444					3	3	3	3	3	1	1	3	2	3
468				4		4	4	4	4	1	1	4	3	4
530				2	2	4	4	4	4	1	1	4	3	4
561				1	3	4	4	4	4	1	1	4	3	4
592					4	4	4	4	4	1	1	4	3	4

* Flue gas accessories certified for installation in a utility room or in a protected place

> ACCESSORIES:
UPON REQUEST FOR CONFIGURATION ACCORDING TO PROJECT SPECIFICATIONS

	DESCRIPTION		CODE
	additional sensor for storage tank and/or system flow for cascade configurations with and without hydraulic separator	cable 2 m	1KWMA11W
		cable 5 m	043005X0
	outdoor probe		013018X0
	Single empty cabinet for outdoors		046060X0
	Double empty cabinet for outdoors		046061X0
	hydraulic separator DN 32. For installation until 150 kW. The installer is responsible for the connection with the boiler		042086X0
	hydraulic separator DN 65 For installation from 151 kW to 300 kW		042078X0
	installation kit for hydraulic separator. For installation from 151 kW to 300 kW		042079X0
	hydraulic separator DN 65 For installation from 301 kW to 600 kW		042080X0
	installation kit for hydraulic separator. For installation from 301 kW to 600 kW		042081X0
	gasketed plates heat exchanger. The hydraulic connection between the boiler and the exchanger is the responsibility of the installer.		

FORCE W HYDRAULIC SEPARATORS
CHARACTERISTICS - ACCESSORIES TO COMPLETE INSTALLATION

The hydraulic separator guarantees the independence between the primary circuit (boiler) and the secondary circuit (system) without any disturbance or interference between them.
The separator is proposed complete with deaerator, sludge separator and is fully insulated.

CHARACTERISTICS:
Max operating pressure: 6 bar
Temperature range: 0 - 100°C
Connections: DN 65 / DN 100

HYDRAULIC SEPARATOR FOR INSTALLATION UP TO 150 KW

	DESCRIPTION	CODE
	Hydraulic separator DN 32 The installer is responsible for the connection with the boiler	042086X0

HYDRAULIC SEPARATOR FOR INSTALLATION FROM 151 TO 300 KW

	DESCRIPTION	CODE
	Hydraulic separator DN 65	042078X0
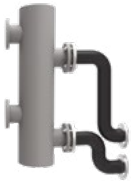	Kit for hydraulic separator installation	042079X0

HYDRAULIC SEPARATOR FOR INSTALLATION FROM 301 TO 600 KW

	DESCRIPTION	CODE
	Hydraulic separator DN 100	042080X0
	Kit for hydraulic separator installation	042081X0

> DIMENSION AND TECHNICAL DATA:

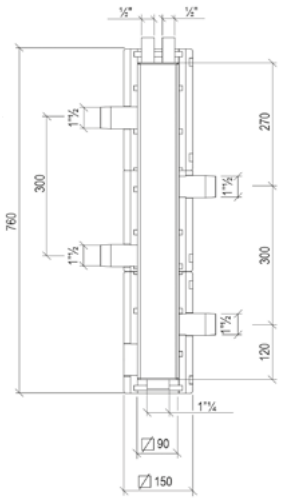

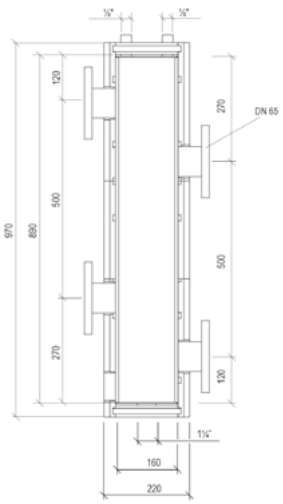

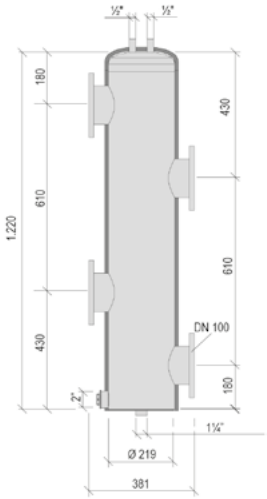

MODEL		DN 32	DN 65	DN 100
Flow rate	m³/h	6.5	18	30
Water content	lt	4.8	21	46
Max temperature	°C	100	100	100
Max pressure	bar	6	6	6
Material	-	ST37.1 stainless	ST37.1 stainless	ST37.1 stainless
Insulation	-	Black EPP - 40 g/l	Black EPP - 40 g/l	Black EPP - 40 g/l

FLOOR STANDING BOILERS

CONDENSING
TRADITIONAL
INDUSTRIAL

TP3 COND THREE PASS FLUE CONDENSING BOILER

> THE RANGE:

Models Available from **65kW** to **2,600kW**.

> PRODUCT BENEFITS:

- Horizontal condensing boiler for pressurised combustion with three flue gas passes and **four-star certified energy efficiency** in accordance with directive EN 15502-1
- Ready for operation in combination with a **jet burner on gas fuel**
- The arrangement and **generous sizing of the combustion chamber guarantee a low heating load** and the possibility to be combined with burners featuring technology for the combustion with low polluting emissions
- Range consisting of 7 models with rated outputs from **820** to **2,600 kW**.
- **Steel, condensing heat boiler** with **high water content**, designed to work in conjunction with **gas or oil** jet burners
- **Boiler with three flue gas passes**, with return pipe from the bottom of the combustion chamber
- **Floating combustion chamber with wet bottom,** low volumetric heat load and **standard turbulators** on the last flue gas pass
- **Front single-piece door** equipped with blind flange for securing the burner. All the parts in contact with the flue gases are coated with refractory material offering high resistance and thermal insulation **Reversible opening (right and left)** and closing system and micro-metric adjustment on four points
- **Double return fitting** for low and high temperature systems
- **Contained front overall dimensions** to fit the boiler through the accessways of thermal power plants
- **High energy** efficiency
- **Maximum** operating **pressure 6 bar**
- **Heat transfer fluid circulation** control system inside the body to improve exchange and avoid thermal shock
- **"Satellite" control panel** available in thermostatic version

Note: The TP3 COND Boiler is supplied with Controller – Part no:- 0Q2K10XA, please see Technical Files on website for details.

MODEL			65	100	150	230	370	500	650	820	1000
ERP Class			A	ENERGY LABELLING NOT RELEVANT							
Heat input (kW)		Max	61.3	94.3	141.5	217	349.1	471.7	613.2	767	935
		Min	18.4	28.3	42.5	65.1	104.7	141.5	184	498	608
Useful nominal power (80/60°C) (kW)		Max	59.5	91.5	137.3	210.5	338.6	457.5	594.8	752	916
		Min	18	27.7	41.6	63.8	102.6	138.7	180.3	489	595
Useful nominal power (50/30°C) (kW)	Gas	Max	65	100	150	230	370	500	650	820	1000
		Min	19.7	30.3	45.4	69.7	112	151.4	196.8	533	650
	Oil	Max	62.9	96.7	145	222.4	357.8	483.5	628.5	793.5	967.7
		Min	19.1	29.4	44.2	67.7	108.9	147.2	191.3	516.7	630
Efficiency (50/30°C) (%)	Gas	Max	106	106	106	106	106	106	106	106	106
		Min	107	107	107	107	107	107	107	107	107
	Oil	Max	102.5	102.5	102.5	102.5	102.5	102.5	102.5	102.5	102.5
		Min	104	104	104	104	104	104	104	104	104
Efficiency 30%	Gas	Max	107.5	107.5	107.5	107.5	107.5	107.5	107.5	107.5	107.5
	Oil	Min	104.5	104.5	104.5	104.5	104.5	104.5	104.5	104.5	104.5
Max operating pressure		bar	6	6	6	6	6	6	6	6	6
Pressure drop on flue gas side		mbar	0.4	0.65	1.7	1.7	2	3.5	4.2	6	6.4
Protection rating			IPX0D								
Electric power supply		V/Hz	230/50	230/50	230/50	230/50	230/50	230/50	230/50	230/50	230/50
Empty weight		Kg	377	436	490	645	1035	1338	1451	2050	2150
CODE			**0RGZ3AXA**	**0RGZ4AXA**	**0RGZ5AXA**	**0RGZ8AXA**	**0RGZBAXA**	**0RGZDAXA**	**0RGZGAXA**	**0RGE00XA**	**0RGF00XA**
THERMOSTATIC CONTROL PANEL CODE			**0Q2K10XA**								

TP3 COND

> DIMENSIONS:

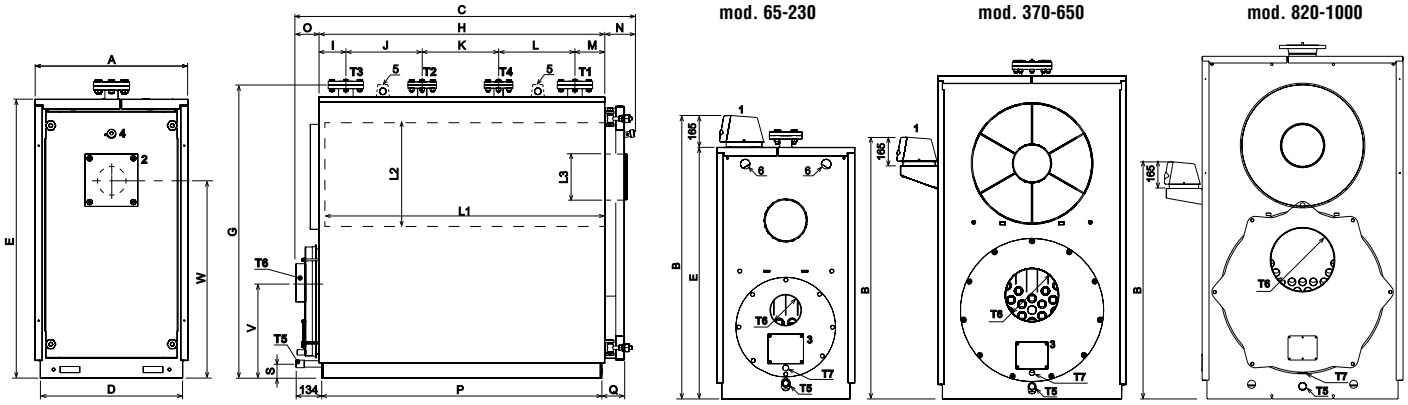

> KEY

T1 Heating delivery
T2 High temperature return
T3 Low temperature return
T4 Safety fitting
T5 Boiler discharge connection
T6 Chimney connection
T7 Condensate discharge connection
1 Tool panel
2 Burner connection flange
3 Flue gas chamber cleaning door
4 Flame control light

MODEL			65	100	150	230	370	500	650	820	1000
Measurements	A	mm	700	700	700	800	950	1050	1050	1180	1180
	B	mm	1437	1437	1437	1637	1462	1462	1462	1424	1424
	C	mm	1157	1377	1577	1777	1987	2187	2387	2620	2620
	D	mm	650	650	650	750	900	1000	1000	1120	1120
	E	mm	1275	1275	1275	1475	1655	1805	1805	2006	2006
	G	mm	1335	1335	1335	1535	1715	1860	1860	2075	2075
	H	mm	878	1098	1298	1498	1698	1900	2100	2094	2094
	I	mm	123	123	123	142	172	179	179	224	224
	J	mm	200	260	350	400	450	500	600	650	650
	K	mm	200	300	320	400	450	500	600	300	450
	L	mm	200	260	350	400	450	500	500	600	600
	M	mm	155	155	155	156	176	221	221	320	320
	N	mm	157	157	157	157	167	167	167	278	273
	O	mm	122	122	122	122	122	120	120	262	262
	P	mm	846	1066	1266	1467	1667	1867	2067	2068	2216
	Q	mm	134	134	134	134	144	144	144	226	226
	S	mm	80	80	80	80	70	70	70	78	78
	V	mm	450	443	435	500	550	587	580	830	830
	W	mm	905	905	905	1055	1200	1315	1315	1480	1480
System flow	T1		DN 50	DN 50	DN 50	DN 65	DN 80	DN 100	DN 100	DN 125	DN 125
High temperature system return	T2		DN 40	DN 40	DN 40	DN 40	DN 50	DN 65	DN 65	DN 65	DN 65
Low temperature system return	T3		DN 50	DN 50	DN 50	DN 65	DN 80	DN 100	DN 100	DN 125	DN 125
Safety fitting	T4		DN 40	DN 40	DN 40	DN 40	DN 50	DN 65	DN 65	DN 80	DN 80
Boiler discharge	T5		1”	1”	1”	1”	1”	1”	1”	1" 1/2	1" 1/2
Flue gas outlet	T6	ØE mm	160	160	160	200	250	300	300	350	350
Hearth length	L1	mm	686	906	1106	1308	1473	1672	1872	1980	2130
Internal diameter of the hearth	L2	Ø mm	420	420	420	500	550	610	610	700	700
Max nozzle diameter	L3	Ø mm	155	155	155	155	190	190	190	270	270
Nozzle length min / max		mm	160/230	160/230	160/230	160/230	160/230	160/230	160/230	320/390	320/390

PREXTHERM RSW PRESSURISED STEEL BOILER

QUADRA VERSION
92 ÷ 1890

TONDA VERSION
2360 ÷ 6000

> THE RANGE:

Models Available from **92kW** to **6000kW** (6MW)

> PRODUCT BENEFITS:

- Boiler body made entirely from **steel**, completely lined with an 80 mm layer of high density glass wool, in turn covered by a strong layer of tearproof material
- Maximum **operating pressure 6 bars**, higher pressures upon request
- Pressurised steel boiler, fit for installation of a jet burner, operating with gas or liquid fuel
- **Reverse flame** boiler body, fully insulated with a 80 mm thick layer of glass wool
- Front door with double layer of insulation and **reversible opening** (right and left) and door centering in a unique mechanism
- Carefully designed with a system optimising fluid circulation inside the boiler, thus improving thermal exchange and minimising stress on the materials
- **Max operating pressure: 6 bar**. Higher pressure specifications upon demand
- Models 92 N ÷ 401 N are available with a standard kit of connection flanges in the supply

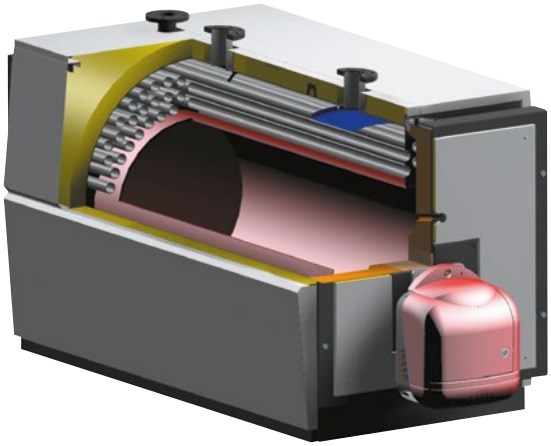

*

REG. 812/2013

* FOR MODELS 92 ÷ 350

MODEL	HEAT OUTPUT		HEAT INPUT		PRESSURE DROP FLUE GAS SIDE	BODY EMPTY WEIGHT	WIDTH	HEIGHT**	DEPTH	CODE
	min kW	max kW	min kW	max kW	mbar	kg	mm	mm	mm	(see page 3)
92 N	60	92	64,3	99,5	0,5	260	800	925	1087	**0QIJ3AXA**
107 N	70	107	75	116	0,7	260	800	925	1087	**0QIJ4AXA**
152 N	100	152	107,3	165	1,2	350	800	980	1337	**0QIJ6AXA**
190 N	137	190	147,4	206	1,2	350	800	980	1337	**0QIJ7AXA**
240 N	160	240	170,9	261	2,3	440	800	980	1587	**0QIJ8AXA**
300 N	196	300	209,5	326	3,3	480	940	1100	1607	**0QIJ9AXA**
350 N	228	350	277,5	378	3,5	590	940	1100	1857	**0QIJAAXA**
401 N	260	401	364,5	432	4,4	590	940	1100	1857	**0QIJBAXA**
525 N	341	525	417	567	4,3	860	1050	1250	1859	**0QIJEAXA**
600 N	390	600	495	648	4,8	970	1050	1250	2219	**0QIJFAXA**
720 N	468	720	502	777	4,5	1250	1250	1400	2219	**0QIJHBXA**
820 N	533	820	566	881	5,6	1250	1250	1400	2219	**0QIJIBXA**
940 N	611	940	651	1011	5,4	1420	1250	1400	2455	**0QIJJBXA**
1060 N	689	1060	731	1140	6,0	1580	1430	1580	2482	**0QIJKBXA**
1250	813	1250	884	1359	6,5	1953	1450	1580	2420	**0QCJ00XA**
1480	962	1480	1046	1608	6,5	2400	1530	1730	2722	**0QCL00XA**
1600	1040	1600	1158	1736	6,8	2500	1530	1730	2722	**0QCN00XA**
1890	1229	1890	1336	2054	7,0	2650	1530	1730	2722	**0QCP00XA**
2360	1535	2360	1668	2565	7,2	3550	1610	1950	3232	**0QCS00XA**
3000	1950	3000	2113	3250	7,5	4490	1800	2140	3446	**0QCU00XA**
3600	2340	3600	2536	3900	8,2	4900	1800	2140	3816	**0QCV00XA**
4000	2600	4000	2819	4334	9,5	6780	1980	2325	4086	**0QCW00XA**
4500	2926	4500	3165	4868	10,5	7380	1980	2325	4436	**0QCX00XA**
5000	3251	5000	3515	5407	10,8	9600	2180	2525	4458	**0QCY00XA**
6000	3902	6000	4215	6483	12,0	11500	2180	2525	4958	**0QCZ00XA**

*** Including water connections*

PREXTHERM RSW

THERMOSTATIC CONTROL BOARD FOR STEEL PRESSURISED BOILERS

> THE ADVANTAGES:

- Can be combined with single-stage and two-stage jet burners
- Double contact regulation thermostat
- Anticondensation function with minimum threshold for starting the adjustable pump
- Set-up for the installation of a temperature control

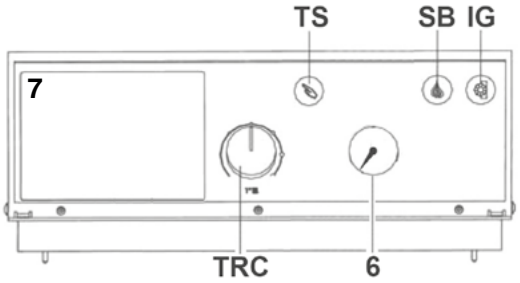

> KEY

IG Main switch
SB Blocked burner light
TRC Adjustment thermostat
TS Safety Reset / Thermostat
6 Thermometer
7 Temperature control set-up (not supplied)

CODE	DESCRIPTION
0Q2K10XA	THERMOSTATIC CONTROL BOARD

ATLAS D CAST IRON FLOORING STANDING BOILERS, FOR OIL

> PRODUCT BENEFITS:

- **Heating device** designed to operate with jet burners with electric absorption ≤180 W for models 25-37 and ≤200 W for models 50-63-75 or for replacement with identical devices according to current regulations
- **Cast iron body**, with preassembled elements with steel double cones and tie rods, of the **three flue gas pass type** with completely wet combustion chamber
- **The standard electronics** can manage the heating system circulator, the remote timer control or room thermostat, the outdoor probe for flow temperature compensation, the circulator (3-way valve) and storage tank probe for DHW production with external storage
- **Key controls** and **LCD display interface**

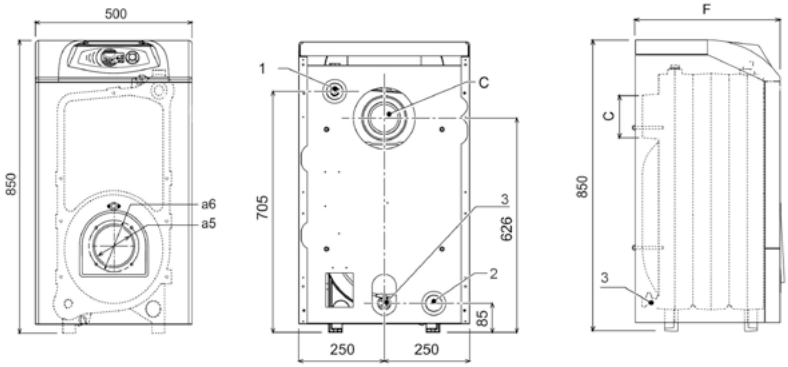

> KEY

1 1" 1/2" system flow
2 1" 1/2" system return
3 Heating system drain valve
a5 Burner hole
a6 Burner connection
C Flue gas outlet

MODEL	C ø mm	F mm	a5 ø mm	a6 ø mm
ATLAS D 25	120 - 130	400	115	150
ATLAS D 37	120 - 130	500	115	150
ATLAS D 50	120 - 130	600	115	150
ATLAS D 63	120 - 130	700	115	150
ATLAS D 75	120 - 130	800	115	150

MODEL		25	37	50	63	75
ERP Class*		B	B	B	B	-
Heat Input	kW	28.3	41.9	56.6	71.3	84.6
Max heat output	kW	25.0	37.0	50.0	63.0	75.0
Pmax efficiency (80/60°C)	%	88.2	88.3	88.4	88.4	88.7
Efficiency 30% Pmax	%	92.2	91.7	91.4	91.0	90.5
Pressure drop on flue gas side	mbar	0.1	0.4	0.4	0.5	0.6
Min/Max operating pressure	bar	0.8 / 6	0.8 / 6	0.8 / 6	0.8 / 6	0.8 / 6
Elements	No.	3	4	5	6	7
Empty weight	Kg	127	166	205	244	283
CODE		**0IHJ3PWA**	**0IHJ4PWA**	**0IHJ5PWA**	**0IHJ6PWA**	**0IHJ7PWA**

** The ErP class is certified if the boilers are combined with oil burners with electric absorption ≤180 W for models ATLAS D 25 - 37 and ≤200 W for models ATLAS D 50 - 63 - 75*

ATLAS A 3 PASS-FLUES BOILER, FOR OIL OR GAS JET BURNER, HEATING ONLY

> PRODUCT BENEFITS:

- High efficiency cast iron boiler body, featuring **3 pass** technology, insulated with high density rockwool
- **Silent** operation thanks to low flues turbulence
- Widely copes with requirements for **2 stars** efficiency according to directive 92/42 EEC, emended by Reg. 812/2013
- **Conic chimney stack**, in order to easily adapt to different tolerances of flue pipes diameters
- **Analogue** control panel with elegant fume cover
- Control board includes thermometer, ignition switch, safety thermostat with manual reset and temperature setting knob
- Stylish steel jacket painted by anaphoresis with epoxy powder

> KEY

a1 System delivery - 1" 1/2"
a2 System return - 1" 1/2"
a3 Heating system drain - 1/2"
a4 Flue connection
a5 Burner connection
34 Safety and heating temperature bulb

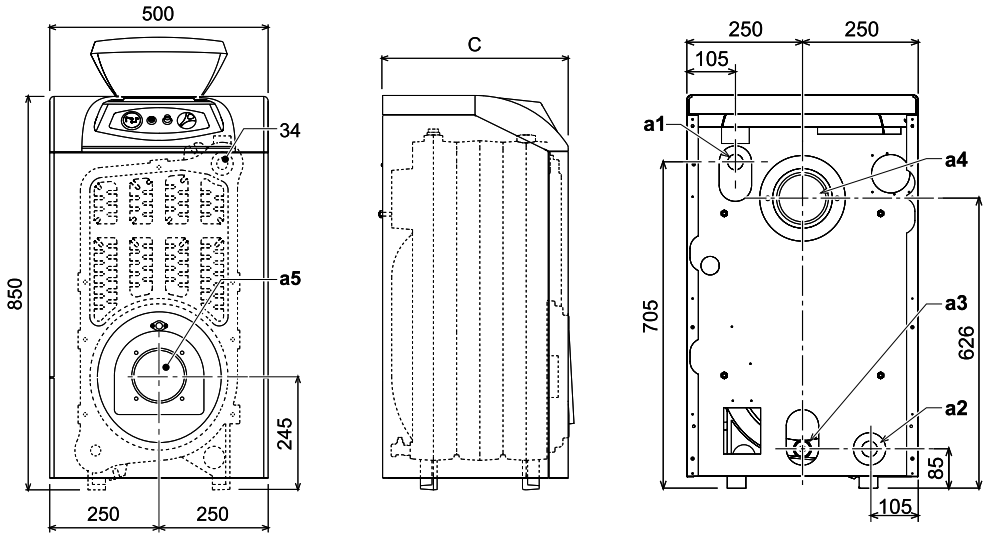

MODEL	C mm	a4 ø mm	a5 ø mm
ATLAS A 32	400	120÷130	115
ATLAS A 47	500	120÷130	115
ATLAS A 62	600	120÷130	115
ATLAS A 78	700	120÷130	115
ATLAS A 95	800	120÷130	115

MODEL			32	47	62	78	95
Heat input	Max Heating	kW	34,9	51,6	67,7	85,6	103,2
Heat output	Max Heating	kW	32,0	47,0	62,0	78,0	95,0
Efficiency	80°C - 60°C 30% load	Pmax % %	91,7 94,3	91,1 93,5	91,5 94,0	91,1 93,5	92,0 93,8
Number of element		no.	3	4	5	6	7
Heating water content		litres	18	23	28	33	38
Heating operating pressure	Max	bar	6	6	6	6	6
Flues pressure drop		mbar	0,2	0,27	0,4	0,4	0,63
Empty weight		kg	127	166	205	244	283
Dimensions	WxHxD	mm	500x850x400	500x850x500	500x850x600	500x850x700	500x850x800
CODE			**0IHJ3AWA**	**0IHJ4AWA**	**0IHJ5AWA**	**0IHJ6AWA**	**0IHJ7AWA**

INDUSTRIAL HEATING

Ferroli Industrial Heating offers a range of boilers for markets worldwide, with outputs varying between 100 and 19500kW:
- boilers for the production of hot water, superheated water and steam (with flame reversal and 3 flue passes)
- solid fuel boilers for the productionof hot water, superheated water and saturated steam

> STEAM BOILERS:

VAPOPREX LVP
- **Steam output from 150 to 3000kg/h**
- Low pressure steam boiler with three flue passes, two in furnace.

VAPOPREX HVP
- **Steam output from 150 to 5000kg/h**
- Medium pressure steam boiler with three flue passes, two in furnace.

VAPOPREX 3GF
- **Steam output from 1700 to 8500kg/h**
- Medium pressure steam boiler with three flue passes.

VAPOPREX 3GN
- **Steam output from 2000 to 28000kg/h**
- Medium pressure steam boiler with three flue passes.

> HOT WATER BOILERS:

HOT WATER PREXTHERM RSW/RSH
- **Heat output from 92 to 3600kW**
- Hot water boiler with three flue passes, two in furnace.

PREXTHERM T 3G
- **Heat output from 1200 to 19500kW**
- Hot water boiler with three flue passes, two in furnace.

> SUPERHEATED WATER BOILERS:

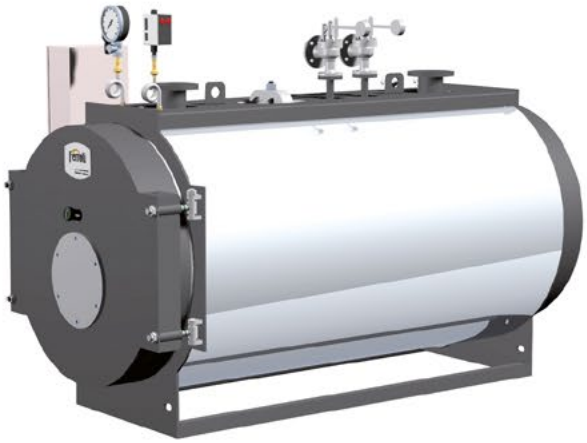

PREX N ASL
- **1.210 - 3.500kW**
- Superheated water boiler max temperature 145°, with three flue passes, two in the furnace.

PREX N ASH
- **160 - 3.500kW**
- Superheated water boiler max temperature 200°, with three flue passes, two in the furnace.

PREXTHERM T3G F ASL
PREXTHERM T3G F ASH
- **1.210 - 9.000kW**
- Superheated water boiler with three flue passes.

PREXTHERM T3G N ASL
PREXTHERM T3G N ASH
- **6.000 - 15.000kW**
- Superheated water boiler with three flue passes.

NOTES

WATER HEATERS

GAS
ELECTRIC

PEGASO ECO* INSTANTANEUOS GAS WATER HEATER, OPEN CHAMBER AND NATURAL DRAUGHT. LOW NOx TYPE

> PRODUCT BENEFITS:

- **For internal installation**
- Open chamber, natural draught gas-fired water heater with modulating heat output with **LOW NOx flue gas emission - Class 6**
- Finned copper tube **heat exchanger**, externally finished with an anti-corrosion aluminium treatment
- **Modulating thermal flow** and fine regulation of the temperature of the hot water exiting
- Easy-to-read **display** with indicators on device operation and power battery charge. Adjustment of power and hot water temperature with pleasant, ergonomic **knobs**
- Battery power supply
- Operates with **LPG**
- Wide range of hot water **temperature control** and **heat output modulation**
- Compact **size** and low weight

** May not be suitable for boats, touring vans and motorhomes.*
Please note: the Pegaso units are primarily designed for the static caravan market. They should only be installed where there is a suitable fixed cold mains water supply. Fitting a unit outside of its intended application, or with insufficient water supply will invalidate the parts only warranty.

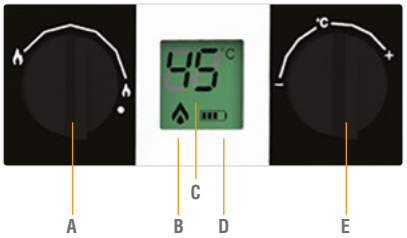

> KEY

A Power setting
B Burner On
C Outlet water temperature
D Electrical batteries level
E Temperature setting - On / Off

PEGASO ECO 6

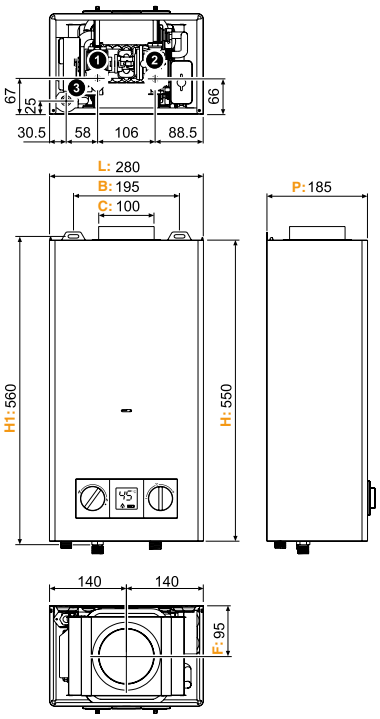

PEGASO ECO 11

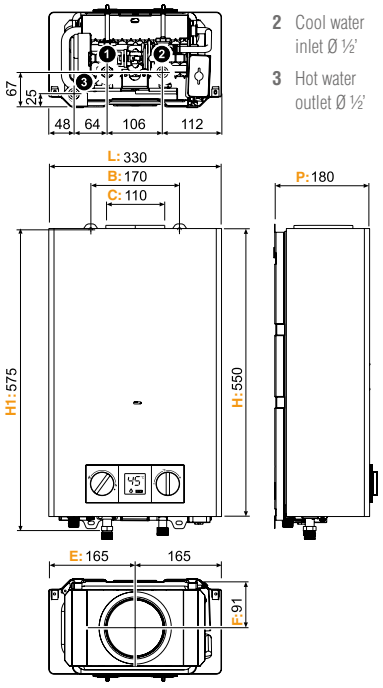

> KEY

1 Gas inlet Ø ½'
2 Cool water inlet Ø ½'
3 Hot water outlet Ø ½'

PEGASO ECO	L (mm)	B (mm)	C (mm)	P (mm)	E (mm)	F (mm)	H (mm)	H1 (mm)
6	280	195	100	185	140	95	550	560
11	330	170	110	180	165	91	550	575

MODEL			6	11
ERP class	M		A	A
Upload profile			XS	M
Inlet thermal power	Max / Min	kW	11,8 / 6,3	21,1 / 8,1
Outlet thermal power	Max / Min	kW	10,4 / 5,4	18,9 / 7,0
NOx Class (in according with EN 15502)			6	6
Working maximum water pressure		bar	10	10
Maximum DHW outlet	Δt 25°C Δt 30°C	l/min l/min	6,0 5,0	10,8 9
DHW temperature setting	Min / Max	°C	40 / 65	40 / 65
Empty weight		Kg	8,5	9,5
Electrical power		V/Hz	3Vdc	3Vdc
CODE	**LPG**		**GCC1HLAA**	**GCC1MLAA**

KONA INSTANTANEOUS GAS WATER HEATER WITH SEALED COMBUSTION CHAMBER AND FORCED DRAUGHT. LOW NOx TYPE

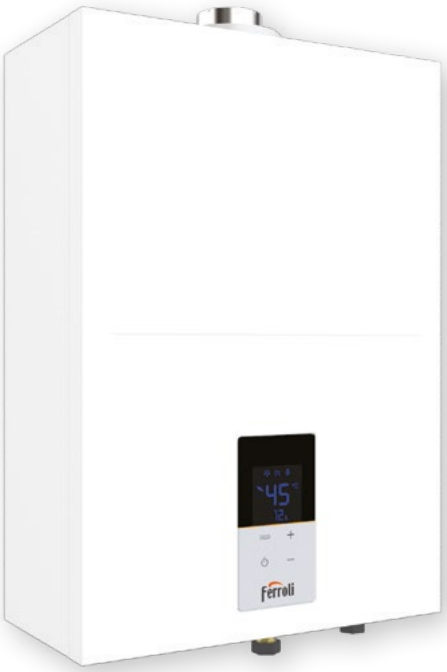

> PRODUCT BENEFITS:

- Efficient and Eco-friendly / Beautiful and Smart / Easy and Robust
- 12 l/min - 15 l/min - 17 l/min
- ErP Class A
- Upload profile XL
- **Internal use only**
- Copper exchanger
- Interface with display and setting with **touch controls**
- **Output thermal power modulating**
- **Natural gas only**
- Low NOx burner - Class 6 (in according to the EN 1515502)
- ECO function
- 2 year warranty

> KEY

A Hot water request
B Burner On
C Outlet water temperature
D Water flow rate
E Parameters setting
F Fan on
G ECO function
H On / Off

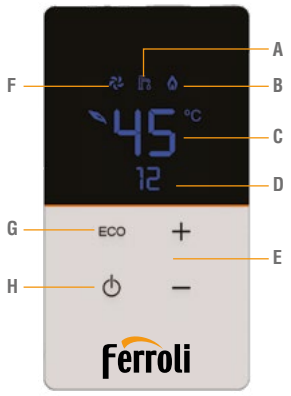

MODEL			12	15	17
ERP Class	XL		A	A	A
Upload profile			XL	XL	XL
Inlet thermal power	Max	kW	23	29,7	33
Outlet thermal power	Max / Min	kW	20,9/3,6	27/3,6	30/3,6
NOx Class (in according with EN 15502)			6	6	6
Working maximum water pressure		bar	10	10	10
Maximum DHW outlet	Δt 25°C Δt 30°C	l/min l/min	12 10	15,5 12,9	17 14,3
DHW temperature setting	Min / Max	°C	40 / 65	40 / 65	40 / 65
Empty weight		Kg	13,7	14,5	14,5
Electrical power		V/Hz	230 / 50	230 / 50	230 / 50
CODE	**NATURAL GAS**		**0DK96IAA**	**0DK95IAA**	**0DK97IAA**

KONA DIMENSIONS AND COMPONENTS DESCRIPTION

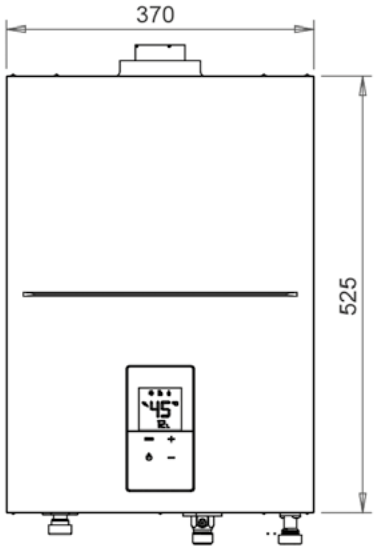

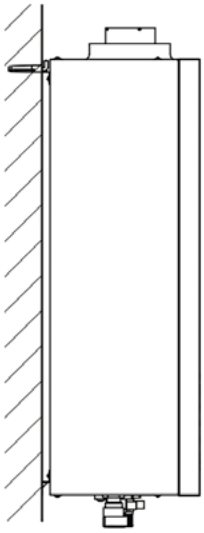

BOTTOM VIEW
Mod. 15-17

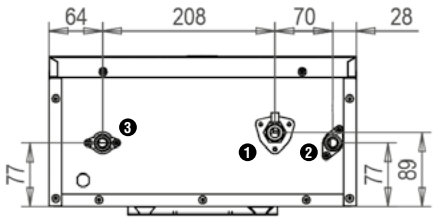

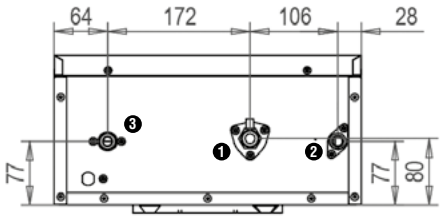

BOTTOM VIEW
Mod. 12

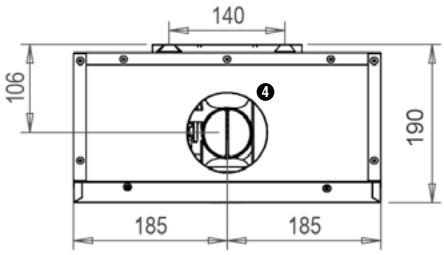

> KEY

1 Gas inlet Ø ½'
2 Cool water inlet Ø ½'
3 Hot water outlet Ø ½'
4 Flue gas outlet: Coaxial type Ø 60/100 mm / Split Ø 80 mm

INITIAL FLUE GAS ACCESSORIES

	DESCRIPTION *(ø 60/100mm)*	CODE
	Concentric horizontal flue kit (1m)	V010040X0
	Vertical concentric adaptor	010037X0
	Concentric extension (1m)	1KWMA56U
	90° concentric bend	1KWMR81U
	45° concentric bend	1KWMA64A
Flue support bracket		1KWMR46A
Vertical terminal		1KWUK001

Note: Condensing flue cannot be used with this appliance

SEV ELECTRICAL WATER HEATERS 50 – 100 LITRES

> PRODUCT BENEFITS:

- Five bolt flange for easy access and periodical maintenance
- Various models with capacity from 50 to 100 litres
- Voltage: 220~240 V 50-60 H
- Stainless Steel Heating Element
- Titanium Healthy Blue silicon glasslined
- Neoprene Gasket System
- Magnesium sacrificial anode for added protection
- Temperature level indicator
- On/off light indicator
- 'Blue Forever' premium heating element
- Pressure relief valve set to 6 bar
- Manual external temperature adjustment
- 3 years warranty on tank

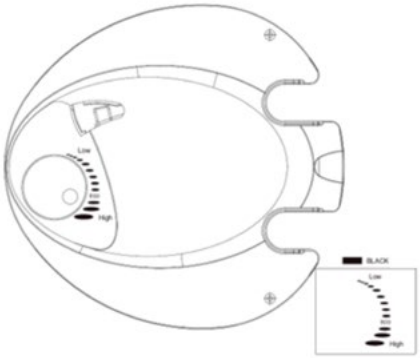

MODEL			SEV-50	SEV-80	SEV-100
DHW tapping profile			M	M	L
ERP Class			C	C	C
Tank capacity		litres	47.5	76	97
Power		kW	3	3	3
Heating time	Δt 35°C Δt 45°C	min min	40.7' 52.3'	65.1' 83.7'	83.1' 106.9'
Weight	EMPTY FULL	Kg	18.0 65.5	22.7 98.7	26.9 123.9
Water connections		inches	1/2" M	1/2" M	1/2" M
Dimensions	WxHxD	mm	450x578x480	450x809x480	450x973x480
CODE			**GRDR4W0A**	**GRDR6W0A**	**GRDR7W0A**

BRAVO ELECTRICAL WATER HEATERS SMALL LITRE CAPACITY

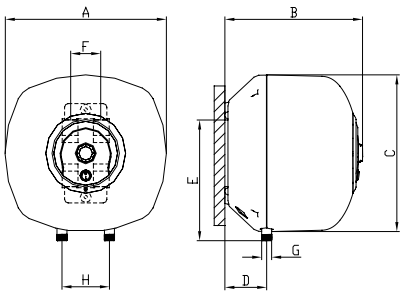

- Range of 5 models with 10, 15 and 30 litre capacities
- 10 and 15-litre models available in versions for installation over and under the sink

> PRODUCT BENEFITS:

- External casing in strong ABS
- Reinforced hanging bracket with internal steel bar
- Capillary thermostat
- High concentration magnesium anode
- ON/OFF switch
- Front step-less temperature adjustment, with power level led indication
- Pressure relief valve, set to 6 bar
- Electric cable included (without plug)

BRAVO	A (mm)	B (mm)	C (mm)	D (mm)	E (mm)	F (mm)	G (ins)	H (mm)
SN 10	340	330	300	90	252	66	1/2" M	100
SN 10 S*	340	330	300	90	114	66	1/2" M	100
SN 15	364	354	337	97	265	66	1/2" M	100
SN 15 S*	364	354	337	97	125	66	1/2" M	100
SN 30	440	440	397	113	318	66	1/2" M	100

MODEL			SN 10	SN 10 S*	SN 15	SN 15 S*	SN 30
Load profile			XXS	XXS	XXS	XXS	S
ERP Class			B	B	B	B	C
Capacity	litres		10	10	14	14	28
Heating time	Δt 35°C Δt 45°C	min min	12.9' 16.5'	12.9' 16.5'	12.9' 16.5'	14.4' 18.5'	24' 30.5'
Power	kW		2	2	2.5	2.5	3
Voltage			220 ~ 240V 50-60 HZ				24
Weight	EMPTY FULL	Kg	6.5 16.5	6.5 16.5	8 22	8 22	12 40
CODE			**SN10SVE2.0**	**SN10SVE2.0U**	**SN15SVE2.5**	**SN15SVE2.5U**	**SN30VE3.0**

** Under Sink*

NOVO ELECTRICAL WATER HEATERS SMALL LITRE CAPACITY

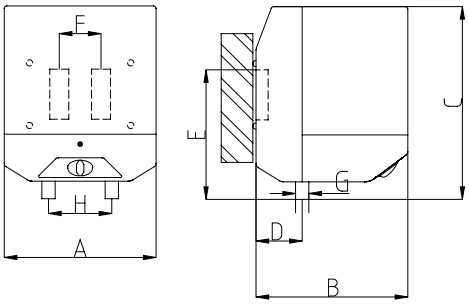

- Range composed of 2 models with 5 and 10-litre capacity both available in versions over and under-sink

> PRODUCT BENEFITS:

- Reinforced hanging bracket with internal steel bar
- Capillary thermostat for temperature management
- High concentration magnesium anode
- ON/OFF switch
- Temperature adjustment, with LED for setpoint achieved
- Pressure relief valve, set to 6 bar
- Electric cable included (without plug)

NOVO	A (mm)	B (mm)	C (mm)	D (mm)	E (mm)	F (mm)	G (ins)	H (mm)
5	240	240	285	76	252	66	1/2" M	100
5 S*	240	240	285	76	114	66	1/2" M	100
10	240	240	440	76	265	66	1/2" M	100
10 S*	240	240	440	76	125	66	1/2" M	100

MODEL			5	5 S*	10	10 S*
Load profile			XXS	XXS	XXS	XXS
ERP Class			B	B	B	B
Capacity	litres		5	5	8	8
Heating time	Δt 35°C Δt 45°C	min min	6.4' 8.3'	6.4' 8.3'	10.3' 13.2'	10.3' 13.2'
Power	kW		2	2	2	2
Voltage			220 ~ 240V 50-60 HZ			
CODE			**GRDWXA0A**	**GRDKXA0A**	**GRDKTA0A**	**GRDWTA0A**

** Under Sink*

CUBO 'BLUE FOREVER' SMALL CAPACITY ELECTRIC WATER HEATERS WITH PREMIUM HEATING ELEMENT

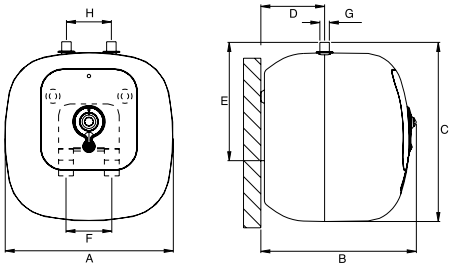

> PRODUCT BENEFITS:

- External casing in strong ABS
- Reinforced hanging bracket with internal steel bar
- 'Blue Forever' premium heating element
- Premium tank warranty
- Thermostatic control
- High concentration magnesium anode
- ON/OFF switch
- Operating light
- Temperature adjustment
- Pressure relief valve, set to 6 bar
- Electric cable included (without plug)

EASY MAINTENANCE | BLUE FOREVER | WARRANTY 5 | WARRANTY 3 | ERP Energy-related Products

CUBO	A (mm)	B (mm)	C (mm)	D (mm)	E (mm)	F (mm)	G (ins)	H (mm)
SG 10	340	330	300	85	259	66	1/2" M	100
SG 10 S*	340	330	300	85	259	66	1/2" M	100
SN 15	364	354	337	85	278	66	1/2" M	100
SG 15 S*	364	354	337	85	278	66	1/2" M	100

MODEL			SG 10	SG 10 S*	SG 15	SG 15 S*
ERP Class			B	B	B	B
Capacity		litres	10	10	14	14
Heating time	Δt 35°C Δt 45°C	min min	12.9' 16.5'	12.9' 16.5'	14.4' 18.5'	14.4' 18.5'
Power		kW	2	2	2.5	2.5
Voltage			220 ~ 240V 50-60 HZ			
Weight	EMPTY FULL	Kg	6.5 16.5	6.5 16.5	8.0 22	8.0 22
CODE			**GRDWTY0A**	**GRNKTY0A**	**GRDBR40A**	**GRNBR40A**

** Under Sink*

MINI INSTANTANEOUS ELECTRIC WATER HEATER

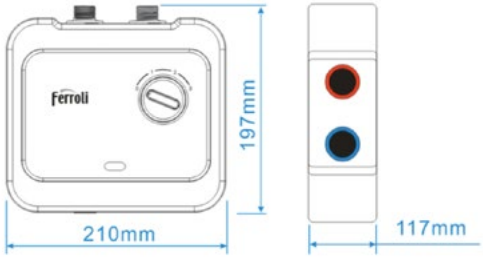

- Easy installation and maintenance. Instant hot water. Under sink installation

> PRODUCT BENEFITS:

- Reinforced hanging bracket with internal steel bar
- External casing in strong ABS
- Capillary thermostat
- High concentration magnesium anode
- ON/OFF switch
- Front step-less temperature adjustment, with power level led indication
- Under-sink only

WARRANTY 2 | ERP Energy-related Products

MODEL			5.5
Dimensions		mm	210 x 197 x 117
ERP Class		(G - A Class)	B
Water connections		inches	1/2" M
Water flow rate	Min	l/min	2
Heating operating pressure	Min / Max	bar	0.8 / 6
Power		kW	5.5
Voltage			220 ~ 240V 50-60 HZ
Weight		Kg	1.5
CODE			**FUS-5.5S**

NOTES

HEAT PUMP WATER HEATERS

EGEA TECH LT

HEAT PUMP WATER HEATER FOR DOMESTIC HOT WATER PRODUCTION

> PRODUCT BENEFITS:

- 192 – 247 litres LT-S version / 200 – 260 LT version
- Efficient and flexible
- Floor standing
- Heat pump water heater with integrated storage tank
- Uses electricity, air and possibly solar thermal and photovoltaic energy
- EGEA TECH is a heat pump water heater for domestic hot water production, with storage in an enameled steel tank, and externally wound condenser for maximum safety and hygiene
- Max. temperature 62°C obtained from renewable energy with heat pump only or via Heating Element (to 75°C)
- Cascade installation up to 8 Egea Tech units
- Integration via Solar Thermal (model LT-S) or Heating Element (to 75°C) on all models
- Integration with Solar Photovoltaic system
- Energy monitoring via display or App
- **Wi-Fi card** installed as standard and control via smartphone using the **"FERROLI HOME"** App
- **Simple and intuitive touch control panel** on board machine
- Available operating modes: **Eco, Auto, Boost, Electric, Fan**

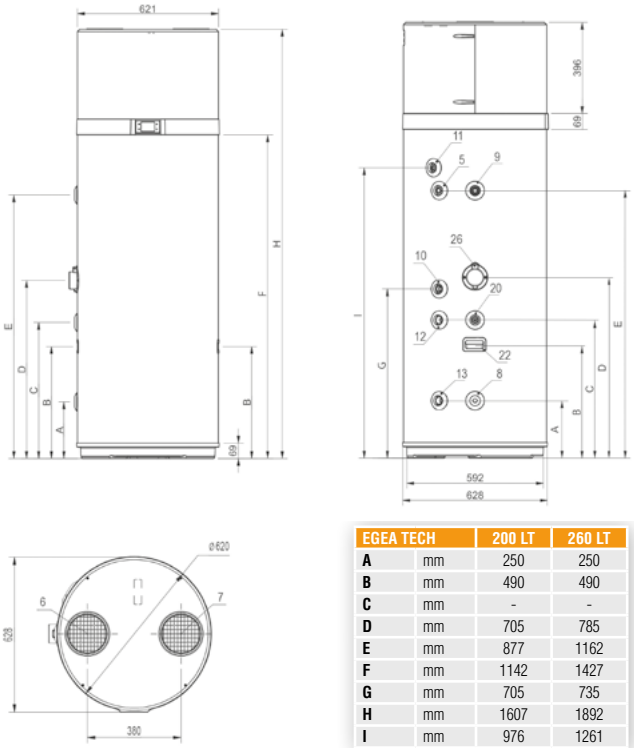

EGEA TECH		200 LT	260 LT
A	mm	250	250
B	mm	490	490
C	mm	-	-
D	mm	705	785
E	mm	877	1162
F	mm	1142	1427
G	mm	705	735
H	mm	1607	1892
I	mm	976	1261

> APPLICATIONS:

The air can be ducted both in and out in order to convey the flow appropriately in the different situations.

Use of energy present outside

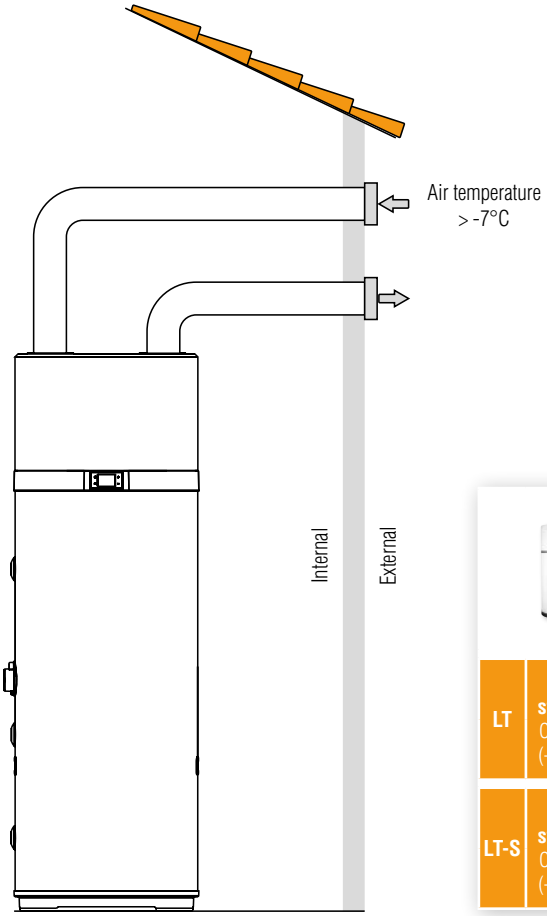

			Capacity L	Heat output W	Absorbed electric power W	Solar thermal integration	Gas type	ERP class	Load profile	No. persons
LT	Floor-standing Operation (-7/38°C)	200	192	1820	430	NO	R134A	A	L	
		260	250	1820	430	NO	R134A	A	XL	
LT-S	Floor-standing Operation (-7/38°C)	200	187	1820	430	YES	R134A	A	L	
		260	247	1820	430	YES	R134A	A	XL	

> GENERAL TECHNICAL DATA:

EGEA TECH		200 LT	260 LT
Nominal storage capacity	L	192	250
Max. hot water capacity at 40°C	L	247	340
Storage dispersion	W	60	70
DHW max. temperature with heat pump only	°C	62	62
DHW max. temperature with supplementary electric booster	°C	75	75
Integrated heating element power	W	1500	1500
Average absorbed power in heating	W	430	430
Pump heat output	W	1339	1249
Dimensions (Ø x H)	mm	621 x 1607	621 x 1892
Empty weight	kg	88	100
Max. water pressure	bar	7	7
Max. air temperature	°C	43	43
Min. air temperature	°C	-7	-7
Nominal air flow	m^3/h	450	450
Max. available head for cold air outlet	Pa	117	117
Duct diameter	mm	160	160
Required room volume	m^3	>20	>20
Power supply parameters	V-Hz	230V - 50Hz	230V - 50Hz
Protection rating		IP24	IP24
Indoor sound power Lw(A)	dB(A)	53	51
Gas type		R134a	R134a
Charge quantity	g	1000	1000
Heating time 7°C in ECO mode	hh:mm	06:27*	09:29*
COP DHW 7°C		3.23	3.37
Internal coil for solar		--	--
Energy efficiency class for heating water in average climatic conditions		A	A
Energy efficiency of water heating in % in average climatic conditions	%	135	138
Annual energy consumption in average climatic conditions	kW/h	761	1210
Declared load profile		L	XL
CODE		**2CP0024F**	**2CP0025F**

- Test in accordance with EN16147-2017 with air inlet temperature at 7°C (6°C), boiler storage ambient temperature 20°C, water heating from 10°C to 53°C. **(*)**
- Test in accordance with EN16147-2017 with air inlet temperature at 14°C (13°C), boiler storage ambient temperature 20°C, water heating from 10°C to 53°C. **(**)**

ACCESSORIES	CODE	DESCRIPTION
	2CP00280	Cascade regulator kit (1 piece should be installed for each water heater in cascade)

> OPERATING LIMITS: **Temperature range**. The graph below gives the temperature range of the air and water produced within which correct operation is guaranteed.

Model 200-260 LT / LT-S

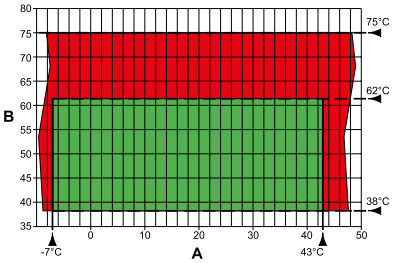

A Inlet air temperature °C

B Temperature of hot water produced °C

Working range for heat pump

Integration with heating element only

> SUPPLY VOLTAGE RANGE:

The table below gives the variation conditions allowed for the power supply

Standard power supply	230-1-50	V-ph-Hz
Permissible voltage range	207 - 254	V

> CONNECTIVITY: Thanks to the "**FERROLI HOME**" App downloadable on smartphone, EGEA TECH can be fully managed by changing its parameters and operating modes.

GET IT ON Google Play

Download on the App Store

FERROLI HOME

EGEA TECH LT-S

200-260
PERFOMANCE

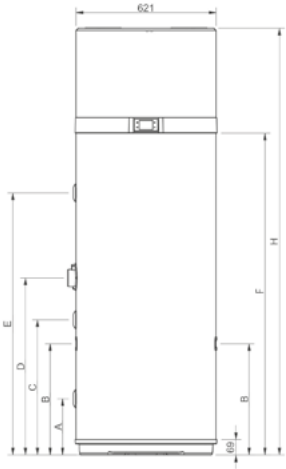

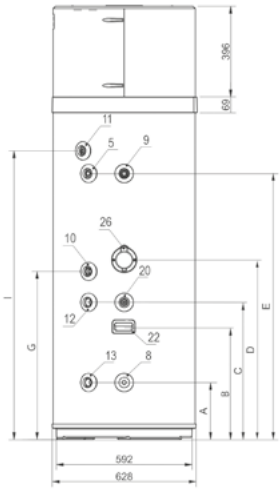

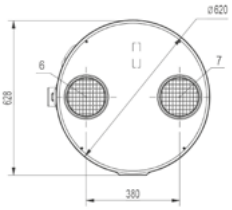

EGEA TECH		200 LT-S	260 LT-S
A	mm	250	250
B	mm	490	490
C	mm	600	600
D	mm	705	785
E	mm	877	1162
F	mm	1142	1427
G	mm	705	735
H	mm	1607	1892
I	mm	976	1261

ACCESSORIES	CODE	DESCRIPTION
	043007X0	**FOR LT-S VERSIONS ONLY** Solar collectors probe (see solar thermal)
	2CP00280	Cascade regulator kit (1 piece should be installed for each water heater in cascade)

> GENERAL TECHNICAL DATA:

EGEA TECH		200 LT-S	260 LT-S
Nominal storage capacity	L	187	247
Max. hot water capacity at 40°C	L	241	335
Storage dispersion	W	60	70
DHW max. temperature with heat pump only	°C	62	62
DHW max. temperature with supplementary electric booster	°C	75	75
Integrated heating element power	W	1500	1500
Average absorbed power in heating	W	430	430
Pump heat output	W	1339	1249
Dimensions (Ø x H)	mm	621 x 1607	621 x 1892
Empty weight	kg	97	109
Max. water pressure	bar	7	7
Max. air temperature	°C	43	43
Min. air temperature	°C	-7	-7
Nominal air flow	m^3/h	450	450
Max. available head for cold air outlet	Pa	117	117
Duct diameter	mm	160	160
Required room volume	m^3	>20	>20
Power supply parameters	V-Hz	230V - 50Hz	230V - 50Hz
Protection rating		IP24	IP24
Indoor sound power Lw(A)	dB(A)	53	51
Gas type		R134a	R134a
Charge quantity	g	1000	1000
Heating time 7°C in ECO mode	hh:mm	06:27*	09:29*
COP DHW 7°C		3.23	3.37
Internal coil for solar		0.72	0.72
Energy efficiency class for heating water in average climatic conditions		A	A
Energy efficiency of water heating in % in average climatic conditions	%	135	138
Annual energy consumption in average climatic conditions	kW/h	761	1210
Declared load profile		L	XL
CODE		**2CP0026F**	**2CP0027F**

- Test in accordance with EN16147-2017 with air inlet temperature at 7°C (6°C), boiler storage ambient temperature 20°C, water heating from 10°C to 53°C. **(*)**
- Test in accordance with EN16147-2017 with air inlet temperature at 14°C (13°C), boiler storage ambient temperature 20°C, water heating from 10°C to 53°C. **(**)**

NOTES

In accordance with the constant efforts to improve its range of products and thus raise the level of customer satisfaction, the Company stresses that the appearance and/or size, technical specifications and accessories may be subject to variation.

Ferroli Ltd
The Granary, Borough Hill Farm, Catton Road,
Walton on Trent, Derbyshire, DE12 8LL
tel. +44.0330.205.0002
www.ferroli.com
uk.sales@ferroli.com

03.26